YAMAHA

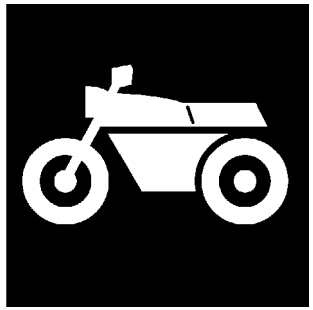

# PARTS CATALOGUE
# CATALOGO DE REPUESTOS

# T110 (40B3) ARGENTINA

1K40B-276S1

( )

YAMAHA
GENUINE
Parts & Accessories

T110
CATALOGO DE REPUESTOS
©2010 por Yamaha Motor Co., Ltd.
1ª edición, mayo 2010
Todos los derechos reservados.
Toda reproducción o uso no autorizado
sin el consentimiento escrito de
Yamaha Motor Co., Ltd.
quedan expresamente prohibidos
Impreso en Japón.

T110
PARTS CATALOGUE
©2010 by Yamaha Motor Co., Ltd.
1st edition, May 2010
All rights reserved.
Any reprinting or unauthorized use
without the written permission of
Yamaha Motor Co., Ltd.
is expressly prohibited.
Printed in Japan.

# PROLOGO

Este catálogo de repuestos corresponde a las piezas para el o los modelos que figuran en la página de portada. Al formular el pedido de repuestos, se ruega citar este catálogo y especificar correctamente el número y el nombre de las piezas.

1. Las modificaciones y agregados que se hayan realizado después de la edición de este Catálogo de Repuestos, serán anunciados en las Informaciones de Recambios.
   Es recomendable que se hagan las correcciones necesarias en el Catálogo de Repuestos de acuerdo con las Informaciones de Recambios.

2. Abreviaciones
   En este. Catálogo de Repuestos se emplean las siguientes abreviaciones.

   "UR" Usar el número de partes especificado
   "UN" Usar la cantidad necesaria
   "AP" Piezas sustitutivas
   "LM" Fabricación local (Hay que pedir los repuestos en las cercanías)
   "F#" Nº de bastidor (Nº aplicable a la máquina)
   "O/S" Sobredimensionado

3. La cantidad de componentes para el montaje
   - Los componentes, suministrados como conjunto, se describen con un punto (.) que precede al nombre del parte como se indica a continuación.
   - La numeración que aparece a la derecha de cada descripción indica la cantidad de partes por cada unidad de conjunto.

| CODIGO Nº | DESCRIPCION | CANT. | OBSERVACIONES |
|---|---|---|---|
| 2F5–83310–60 | ENSAMBLAJE DE LA LUZ | 2 | |
| 115–83311–60 | .BOMBILLA (6V–18W) | 1 | |

4. Los colores de los componentes se indican como sigue en la columna de "OBSERVACIONES".

| CODIGO Nº | DESCRIPCION | CANT. | OBSERVACIONES |
|---|---|---|---|
| 2N4–24110–00–X5 | COMP. DEL TANQUE | 2 | MXR |
| 3J1–24240–10 | .GRAFICO, DEL TANQUE | 1 | PARA MXR |

5. Debe tenerse en cuenta que las ilustraciones sirven como guia para la búsqueda de los números de partes y no deben usarse para el montaje. Durante el montaje, se recomienda usar el manual de taller correspondiente.

6. EL asterisco (*) antes del número de referencia indica los elementos modificados después de la primera edición.

# FOREWORD

This Parts Catalogue is related to the parts for the model(s) on the cover page. When you are ordering replacement parts, please refer to this Parts Catalogue and quote both part numbers and part names correctly.

1. Modifications or additions which have been made after the issue of the Parts Catalogue will be announced in the Parts News.
   It is advisable that you make the necessary corrections to the Parts Catalogue according to the Parts News.

2. Abbreviations
   The following abbreviations are used in this Parts Catalogue.

   “UR” Use specified parts number.
   “UN” Use as many as needed.
   “AP” Alternate Parts
   “LM” Locally Made (Parts need to be ordered locally)
   “F#” Frame No. (Applicable machine No.)
   “O/S” Over Size

3. The number of components for assembly
   - Parts, which are to be supplied in an assembly, are listed with a dot (.) in front of the part name as shown below.
   - The numeral appearing to the right of each component part indicates the quantity of parts for each assembly unit.

| PART NO. | DESCRIPTION | Q’TY | REMARKS |
|---|---|---|---|
| 2F5–83310–60 | FRONT FLASHER LIGHT ASSY | 2 | |
| 115–83311–60 | .BULB (6V–18W) | 1 | |

4. Applicable colours of graphics are represented in the “REMARKS” as shown below.

| PART NO. | DESCRIPTION | Q’TY | REMARKS |
|---|---|---|---|
| 2N4–24110–00–X5 | FUEL TANK COMP. | 2 | MXR |
| 3J1–24240–10 | .GRAPHIC, FUEL TANK | 1 | FOR MXR |

5. Note that the illustrations for reference in finding parts numbers are not to be used for assembling. When assembling, please use the applicable service manual.

6. The asterisk (*) before a reference number indicates modified items after the first edition.

7. Números de serie

Nº de Serie del bastidor

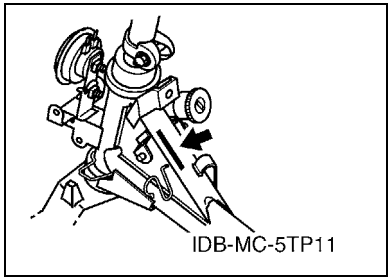


Nº de Serie del motor

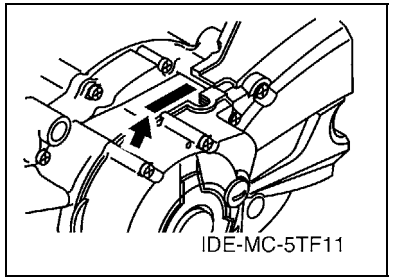


8. Códigos de color aplicables (El símbolo (*) muestra el color de modelo.)

| Abreviatura | Nombre de color | Código de color |
|---|---|---|
| BS4 | BLUISH SILVER 4 | 0820 |
| CIS | CIRCUIT SILVER | 00WN |
| DPBMC(*) | DEEP PURPLISH BLUE METALLIC C | 0564 |
| DRMK(*) | DEEP RED METALLIC K | 0918 |
| SMX(*) | BLACK METALLIC X | 0903 |
| YB | YAMAHA BLACK | 0033 |
| | | |
| | | |
| | | |
| | | |

9. Nº de serie inicial aplicable

Nº de Serie del bastidor

| Nº de serie | Nombre de la columna de cantidades | Código de Modelo |
|---|---|---|
| | | |
| | | |
| | | |
| | | |
| | | |

Nº de Serie del motor

| Nº de serie | Nombre de la columna de cantidades | Código de Modelo |
|---|---|---|
| | | |
| | | |
| | | |
| | | |
| | | |

7. Applicable Serial No.

Frame Serial No.

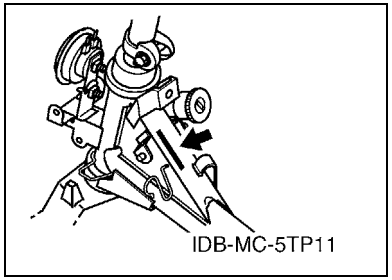


Engine Serial No.

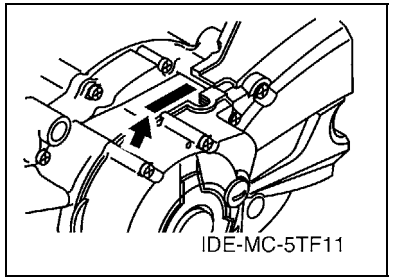


8. Applicable Colour Code (The (*) mark shows Model colour.)

| Abbreviation | Colour Name | Colour Code |
|---|---|---|
| BS4 | BLUISH SILVER 4 | 0820 |
| CIS | CIRCUIT SILVER | 00WN |
| DPBMC(*) | DEEP PURPLISH BLUE METALLIC C | 0564 |
| DRMK(*) | DEEP RED METALLIC K | 0918 |
| SMX(*) | BLACK METALLIC X | 0903 |
| YB | YAMAHA BLACK | 0033 |
| | | |
| | | |
| | | |
| | | |

9. Applicable Starting Serial No.

Frame Serial No.

| Serial No. | Name Of Q'ty Column | Model Code |
|---|---|---|
| | | |
| | | |
| | | |
| | | |
| | | |

Engine Serial No.

| Serial No. | Name Of Q'ty Column | Model Code |
|---|---|---|
| | | |
| | | |
| | | |
| | | |
| | | |

# CONTENIDO

## MOTOR

CULATA DE CILINDRO ..... 1
CIGUENAL & PISTON ..... 2
VALVULA ..... 3
ARBOL DE LEVAS & CADENA ..... 4
BOMBA DE ACEITE ..... 5
ADMISION ..... 6
CARBURADOR ..... 7
DESCARGA ..... 9
CARTER ..... 11
CUBIERTA DE CARTER 1 ..... 12
ARRANQUE ..... 13
EMBRAGUE DEL ARRANQUE ..... 14
EMBRAGUE ..... 15
TRANSMISION ..... 17
LEVA DE CAMBIO & HORQUILLA ..... 18
EJE DE CAMBIO & PEDAL ..... 19

## SHASIS

CUADRO ..... 20
GUARDABARRO ..... 21
CUBIERTA LATERAL ..... 22
BRAZO TRASERO & SUSPENSION ..... 23
DIRECCION ..... 24
HORQUILLA DELANTERA ..... 26
DEPOSITO DE COMBUSTIBLE ..... 28
ASIENTO ..... 29
RUEDA DELANTERA ..... 30
CALIBRE FRENO DELANTERA ..... 31
RUEDA TRASERA ..... 32
MANILLAR & CABLE ..... 34
CILINDRO MAESTRO DELANTERO ..... 35
SOPORTE & APOYAPIE ..... 36
PATA PROTEGIDA ..... 38
GENERADOR ..... 40
MOTOR DE ARRANQUE ..... 41
LUZ DE DESTELLADOR ..... 42
MEDIDOR ..... 43
FARO DELANTERO ..... 44
LUZ DE COLA ..... 45
INTERRUPTOR DE MANILLAR&PALANC ..... 46
EQUIPO ELECTRICO 1 ..... 47
EQUIPO ELECTRICO 2 ..... 48

## INDICE

INDICE NUMERICO ..... 49

# CONTENTS

## ENGINE

CYLINDER HEAD ..... 1
CRANKSHAFT & PISTON ..... 2
VALVE ..... 3
CAMSHAFT & CHAIN ..... 4
OIL PUMP ..... 5
INTAKE ..... 6
CARBURETOR ..... 7
EXHAUST ..... 9
CRANKCASE ..... 11
CRANKCASE COVER 1 ..... 12
STARTER ..... 13
STARTER CLUTCH ..... 14
CLUTCH ..... 15
TRANSMISSION ..... 17
SHIFT CAM & FORK ..... 18
SHIFT SHAFT ..... 19

## CHASSIS

FRAME ..... 20
FENDER ..... 21
SIDE COVER ..... 22
REAR ARM & SUSPENSION ..... 23
STEERING ..... 24
FRONT FORK ..... 26
FUEL TANK ..... 28
SEAT ..... 29
FRONT WHEEL ..... 30
FRONT BRAKE CALIPER ..... 31
REAR WHEEL ..... 32
STEERING HANDLE & CABLE ..... 34
FRONT MASTER CYLINDER ..... 35
STAND & FOOTREST ..... 36
LEG SHIELD ..... 38
GENERATOR ..... 40
STARTING MOTOR ..... 41
FLASHER LIGHT ..... 42
METER ..... 43
HEADLIGHT ..... 44
TAILLIGHT ..... 45
HANDLE SWITCH & LEVER ..... 46
ELECTRICAL 1 ..... 47
ELECTRICAL 2 ..... 48

## INDEX

NUMERICAL INDEX ..... 49

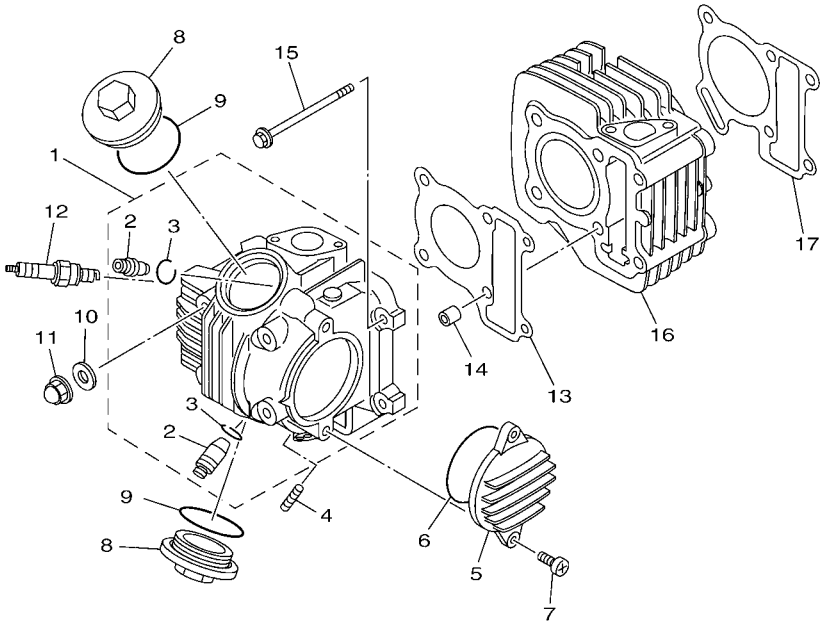

40B1516-G010

## FIG. 1 CULATA DE CILINDRO CYLINDER HEAD

| REF. Nº | CODIGO Nº PART NO. | DESCRIPCION DESCRIPTION | 40B3 | | | | | OBSERVACIONES REMARKS |
|---|---|---|---|---|---|---|---|---|
| 1 | 4S9–E1111–10 | CULATA CILINDRO 1<br>HEAD, CYLINDER 1 | 1 | | | | | |
| 2 | 4ST–11134–11 | .GUIA DE VALVULA 2<br>.GUIDE, VALVE 2 | 2 | | | | | |
| 3 | 93440–10153 | .SEGURO<br>.CIRCLIP | 2 | | | | | |
| 4 | 90116–06805 | ESPARRAGO<br>BOLT, STUD | 2 | | | | | |
| 5 | 4S9–E1185–00 | CUBIERTA CULATA CIL.LAT.3<br>COVER, CYLINDER HEAD SIDE 3 | 1 | | | | | |
| 6 | 93210–62802 | ANILLO O<br>O-RING | 1 | | | | | |
| 7 | 98507–06016 | TORNILLO DE CABEZA CON PLANA<br>SCREW, PAN HEAD | 2 | | | | | |
| 8 | 5WB–E1186–00 | CUBIERTA CULATA CIL.LAT.2<br>COVER, CYLINDER HEAD SIDE 2 | 2 | | | | | |
| 9 | 93210–44807 | ANILLO O<br>O-RING | 2 | | | | | |
| 10 | 90201–08827 | ARANDELA PLANA<br>WASHER, PLATE | 4 | | | | | |
| 11 | 90176–08807 | TUERCA CORONA<br>NUT, CROWN | 4 | | | | | |
| 12 | 94700–00875 | BUJIA (TORCH A7RTC)<br>PLUG, SPARK (TORCH A7RTC) | 1 | | | | | |
| 13 | 4S9–E1181–00 | JUNTA, DE CULATA 1<br>GASKET, CYLINDER HEAD 1 | 1 | | | | | |
| 14 | 99530–10114 | PASADOR, DE ESPIGA<br>PIN, DOWEL | 2 | | | | | |
| 15 | 95027–06090 | PERNO, DE BRIDA<br>BOLT, FLANGE | 2 | | | | | |
| 16 | 4S9–E1310–00–B0 | CILINDRO<br>CYLINDER | 1 | | | | | |
| 17 | 4S9–E1351–00 | JUNTA, DE CILINDRO<br>GASKET, CYLINDER | 1 | | | | | |

## FIG. 2 CIGUENAL & PISTON — CRANKSHAFT & PISTON

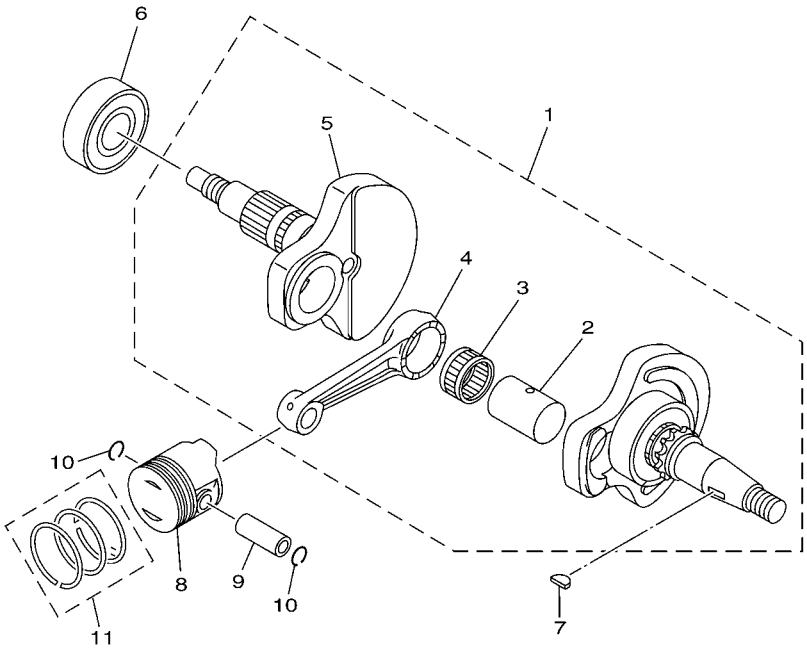

4S91415-F020

| REF. Nº | CODIGO Nº PART NO. | DESCRIPCION DESCRIPTION | 40B3 | | | | | OBSERVACIONES REMARKS |
|---|---|---|---|---|---|---|---|---|
| 1 | 4S9–WE140–00 | CIGUENAL COMPLETO<br>CRANKSHAFT ASSY | 1 | | | | | |
| 2 | 4S9–E1681–00 | .PASADOR MANIVELA 1<br>.PIN, CRANK 1 | 1 | | | | | |
| 3 | 93310–526Y6 | .COJINETE DE RODILLOS<br>.BEARING | 1 | | | | | |
| 4 | 4S9–E1651–00 | .BIELA<br>.ROD, CONNECTING | 1 | | | | | |
| 5 | 4S9–E1422–00 | .MANIVELA 2<br>.CRANK 2 | 1 | | | | | |
| 6 | 93306–205YP | COJINETE<br>BEARING | 1 | | | | | |
| 7 | 90280–03017 | CUNA WOODRUFF<br>KEY, WOODRUFF | 1 | | | | | |
| 8 | 4S9–E1631–10–A0 | PISTON (NORMA)<br>PISTON (STD) | 1 | | | | | |
| 9 | 5WB–E1633–00 | PASADOR, PISTON<br>PIN, PISTON | 1 | | | | | |
| 10 | 93450–14088 | SEGURO<br>CIRCLIP | 2 | | | | | |
| 11 | 4S9–E1603–10 | JUEGO DE ANILLOS (NORMA)<br>PISTON RING SET (STD) | 1 | | | | | |

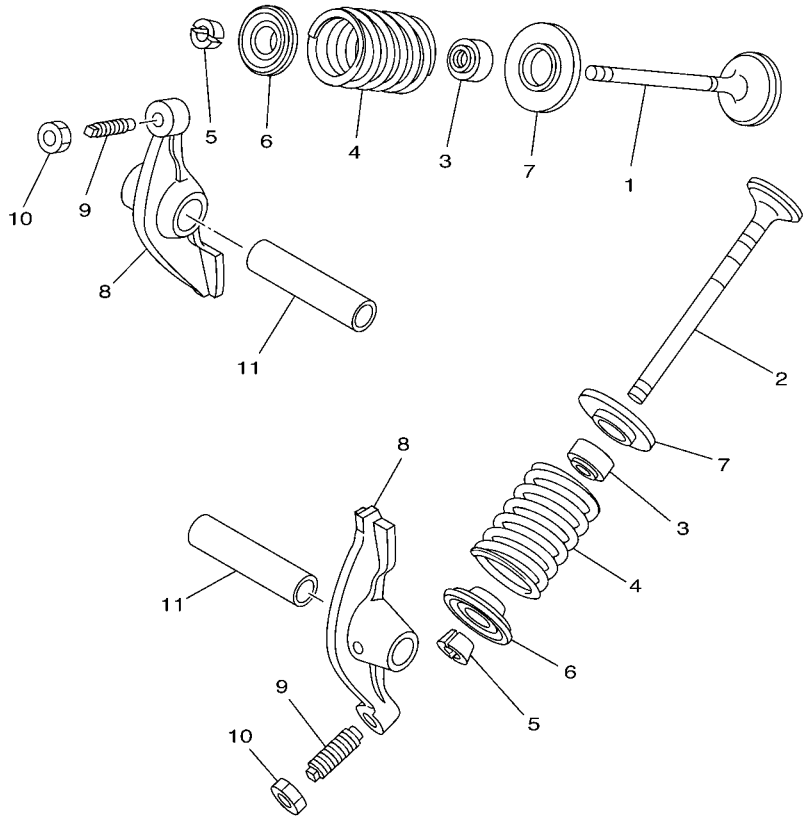

4ST1460-6030

## FIG. 3 VALVULA VALVE

| REF. Nº | CODIGO Nº PART NO. | DESCRIPCION DESCRIPTION | 40B3 | | | | | OBSERVACIONES REMARKS |
|---|---|---|---|---|---|---|---|---|
| 1 | 4S9–E2111–00 | VALVULA DE ADMISION<br>VALVE, INTAKE | 1 | | | | | |
| 2 | 4S9–E2121–00 | VALVULA DE ESCAPE<br>VALVE, EXHAUST | 1 | | | | | |
| 3 | 4S9–E2119–00 | SELLO DE ACEITE VALVULA<br>SEAL, VALVE STEM | 2 | | | | | |
| 4 | 4S9–E2114–00 | RESORTE VALVULA EXTERIOR<br>SPRING, VALVE OUTER | 2 | | | | | |
| 5 | 4S9–E2118–00 | SEGURO DE VALVULA<br>COTTER, VALVE | 4 | | | | | |
| 6 | 4S9–E2117–00 | RETEN RESORTE DE VALVULA<br>RETAINER, VALVE SPRING | 2 | | | | | |
| 7 | 4S9–E2126–00 | ASIENTO RESORTE DE VALVULA2<br>SEAT, VALVE SPRING 2 | 2 | | | | | |
| 8 | 4S9–E2151–00 | BRAZO DE BALANCIN DE VALVULA<br>ARM, VALVE ROCKER | 2 | | | | | |
| 9 | 5WB–E2159–00 | TORNILLO DE AJUSTE DE VALVULA<br>SCREW, VALVE ADJUSTING | 2 | | | | | |
| 10 | 90170–05302 | TUERCA<br>NUT | 2 | | | | | |
| 11 | 5WB–E2156–00 | EJE DE BALANCIN<br>SHAFT, ROCKER 2 | 2 | | | | | |

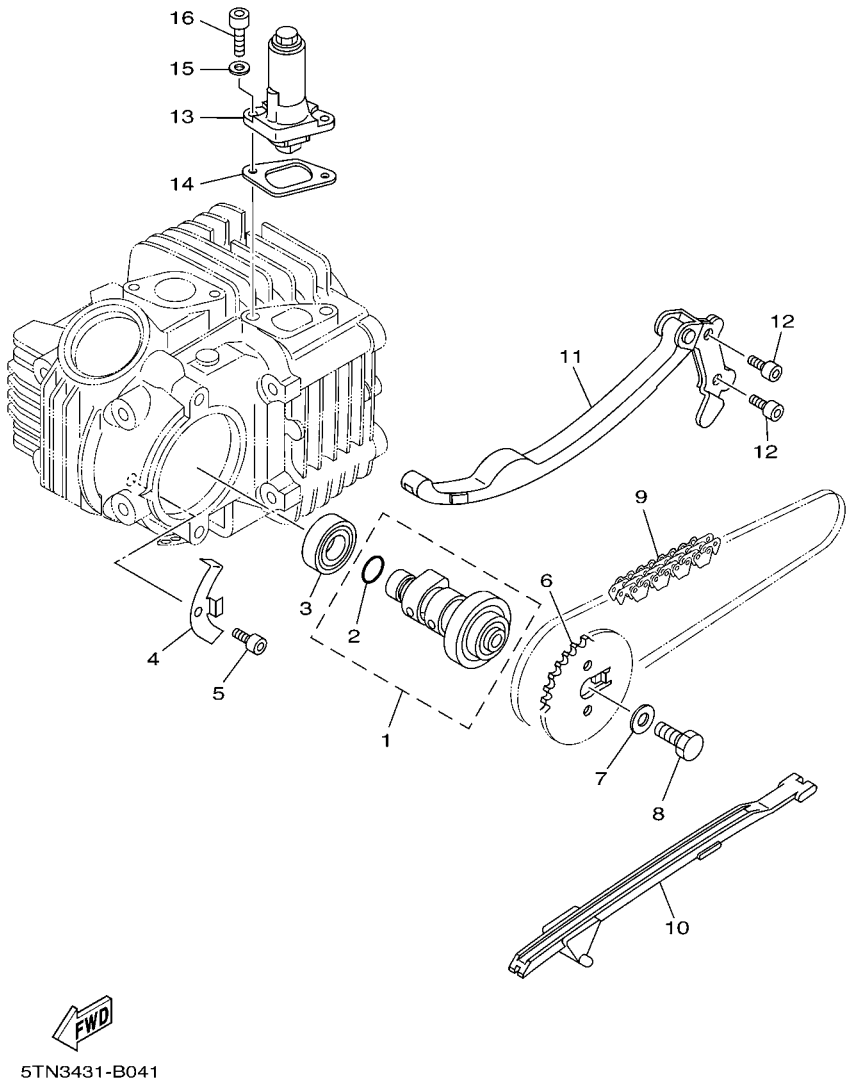


## FIG. 4 ARBOL DE LEVAS & CADENA CAMSHAFT & CHAIN

| REF. Nº | CODIGO Nº PART NO. | DESCRIPCION DESCRIPTION | 40B3 | | | | | OBSERVACIONES REMARKS |
|---|---|---|---|---|---|---|---|---|
| 1 | 4S9–E2170–01 | ARBOL DE LEVAS COMPLETO 1<br>CAMSHAFT ASSY 1 | 1 | | | | | |
| 2 | 93210–108B1 | .ANILLO O<br>.O-RING | 1 | | | | | |
| 3 | 93306–002X9 | COJINETE<br>BEARING | 1 | | | | | |
| 4 | 4S9–E111F–00 | PLACA<br>PLATE | 1 | | | | | |
| 5 | 91317–06012 | PERNO<br>BOLT | 1 | | | | | |
| 6 | 4S9–E2176–00 | CATALINA DE CADENA<br>SPROCKET, CAM CHAIN | 1 | | | | | |
| 7 | 90201–08824 | ARANDELA PLANA<br>WASHER, PLATE | 1 | | | | | |
| 8 | 90101–08820 | TORNILLO<br>BOLT | 1 | | | | | |
| 9 | 94568–D2086 | CADENA<br>CHAIN | 1 | | | | | |
| 10 | 4S9–E2231–00 | TOPE DE GUIA 1<br>GUIDE, STOPPER 1 | 1 | | | | | |
| 11 | 4S9–E2241–00 | TOPE DE GUIA 2<br>GUIDE, STOPPER 2 | 1 | | | | | |
| 12 | 91317–06016 | PERNO<br>BOLT | 2 | | | | | |
| 13 | 5WB–E2210–00 | TENSOR CADENA DE LEVA<br>TENSIONER ASSY, CAM CHAIN | 1 | | | | | |
| 14 | 5WB–E2213–00 | EMPAQUE DE CAJA TENSOR<br>GASKET, TENSIONER CASE | 1 | | | | | |
| 15 | 90430–06817 | JUNTA<br>GASKET | 2 | | | | | |
| 16 | 91317–06018 | PERNO<br>BOLT | 2 | | | | | |

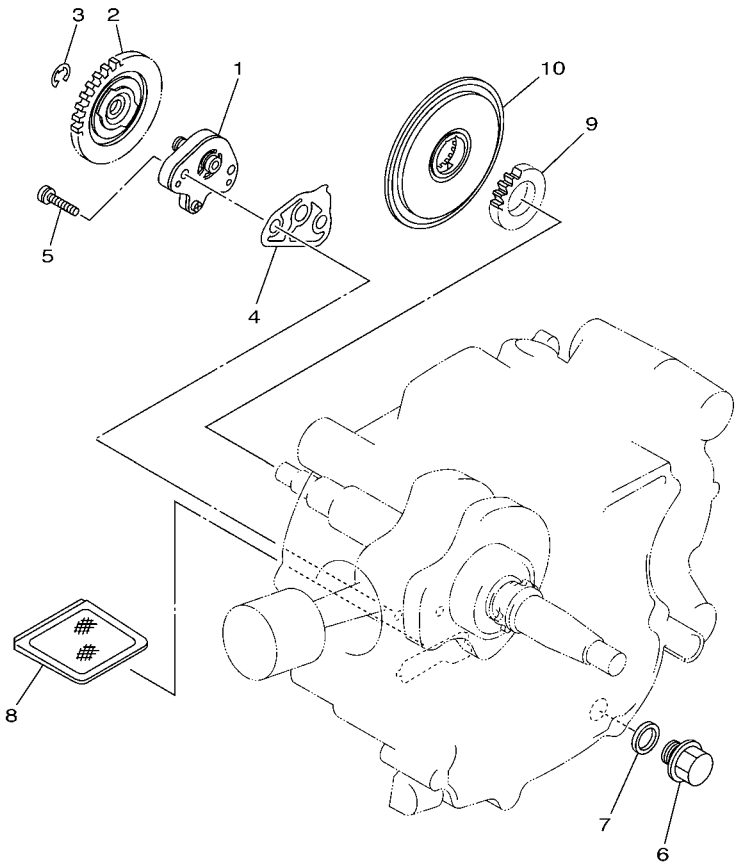

5TN1431-B050

## FIG. 5 BOMBA DE ACEITE OIL PUMP

| REF. Nº | CODIGO Nº PART NO. | DESCRIPCION DESCRIPTION | 40B3 | | | | | OBSERVACIONES REMARKS |
|---|---|---|---|---|---|---|---|---|
| 1 | 4S9–E3104–00 | SUBENSAMBLE BOMBA DE ACETE<br>OIL PUMP SUB ASSY | 1 | | | | | |
| 2 | 4S9–E3325–00 | ENGRANAJE IMPULSOR DE BOMBA 1<br>GEAR, PUMP DRIVEN | 1 | | | | | |
| 3 | 93430–05826 | SEGURO<br>CIRCLIP | 1 | | | | | |
| 4 | 4S9–E3329–00 | EMPAQUE TAPA DE BOMBA<br>GASKET, PUMP COVER | 1 | | | | | |
| 5 | 90155–06801 | TORNILLO CABEZA PLANA RAN.<br>SCREW, FLAT FILLISTER | 2 | | | | | |
| 6 | 90340–12806 | TORNILLO, DE DRENAJE<br>PLUG, STRAIGHT SCREW | 1 | | | | | |
| 7 | 90430–12227 | JUNTA<br>GASKET | 1 | | | | | |
| 8 | 4S9–E3411–00 | FILTRO DE ACEITE<br>STRAINER, OIL | 1 | | | | | |
| 9 | 4S9–E3324–00 | ENGRANAJE TRACC. DE BOMBA<br>GEAR, PUMP DRIVE | 1 | | | | | |
| 10 | 4S9–E3451–00 | FILTRE ROTATIVO<br>FILTER,ROTARY | 1 | | | | | |

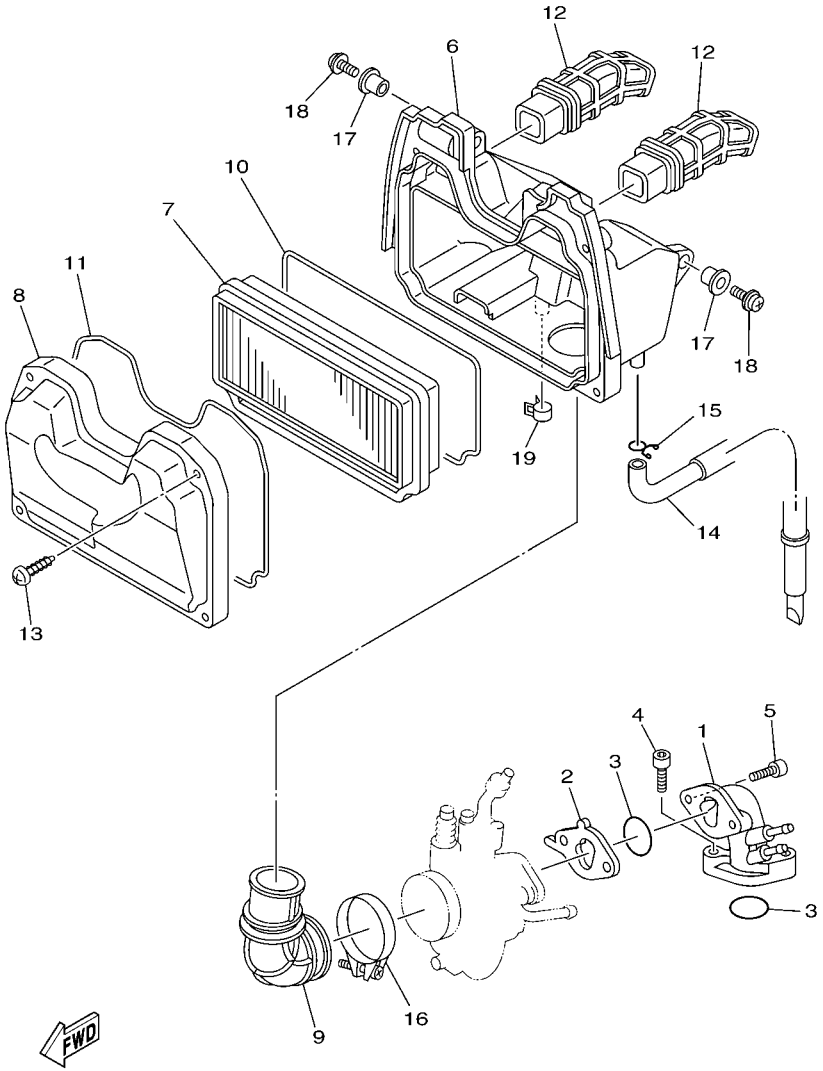


4S91415-F050

## FIG. 6 ADMISION INTAKE

| REF. Nº | CODIGO Nº PART NO. | DESCRIPCION DESCRIPTION | 40B3 | | | | | OBSERVACIONES REMARKS |
|---|---|---|---|---|---|---|---|---|
| 1 | 4S9–E3586–00 | TOBERA DE CARBURADOR 1<br>JOINT, CARBURETOR 1 | 1 | | | | | |
| 2 | 4S9–E3595–00 | TOBERA<br>JOINT | 1 | | | | | |
| 3 | 93210–25809 | ANILLO O<br>O-RING | 2 | | | | | |
| 4 | 91317–06025 | PERNO<br>BOLT | 2 | | | | | |
| 5 | 91317–06025 | PERNO<br>BOLT | 2 | | | | | |
| 6 | 4S9–E4411–10 | CAJA FILTRO DEL AIRE 1<br>CASE, AIR CLEANER 1 | 1 | | | | | |
| 7 | 4S9–E4451–00 | ELEMENTO DEL FILTRO DEL AIRE<br>ELEMENT, AIR CLEANER | 1 | | | | | |
| 8 | 4S9–E4412–00 | TAPA CAJA DEL FILTRO 1<br>CAP, CLEANER CASE 1 | 1 | | | | | |
| 9 | 4S9–E4453–00 | UNION DEL FILTRO DEL AIRE 1<br>JOINT, AIR CLEANER 1 | 1 | | | | | |
| 10 | 4S9–E4457–00 | SELLO<br>SEAL | 1 | | | | | |
| 11 | 4S9–E4452–00 | SELLO<br>SEAL | 1 | | | | | |
| 12 | 4S9–E4423–00 | TUBO DE SUCCION 1<br>PIPE, SUCTION 1 | 2 | | | | | |
| 13 | 9770M–50030 | TORNILLO ROSCA HEMBRA<br>SCREW, TAPPING | 4 | | | | | |
| 14 | 4S9–E443E–00 | TUBO, DRENAJE<br>PIPE, DRAIN | 1 | | | | | |
| 15 | 90467–11106 | PRESILLA<br>CLIP | 1 | | | | | |
| 16 | 90460–43053 | BRIDA, DE UNION<br>CLAMP, HOSE | 1 | | | | | |
| 17 | 90387–06737 | ESPACIADOR<br>COLLAR | 2 | | | | | |
| 18 | 95807–06020 | TORNILLO<br>BOLT, FLANGE | 2 | | | | | |
| 19 | 90467–13800 | PRESILLA<br>CLIP | 1 | | | | | |

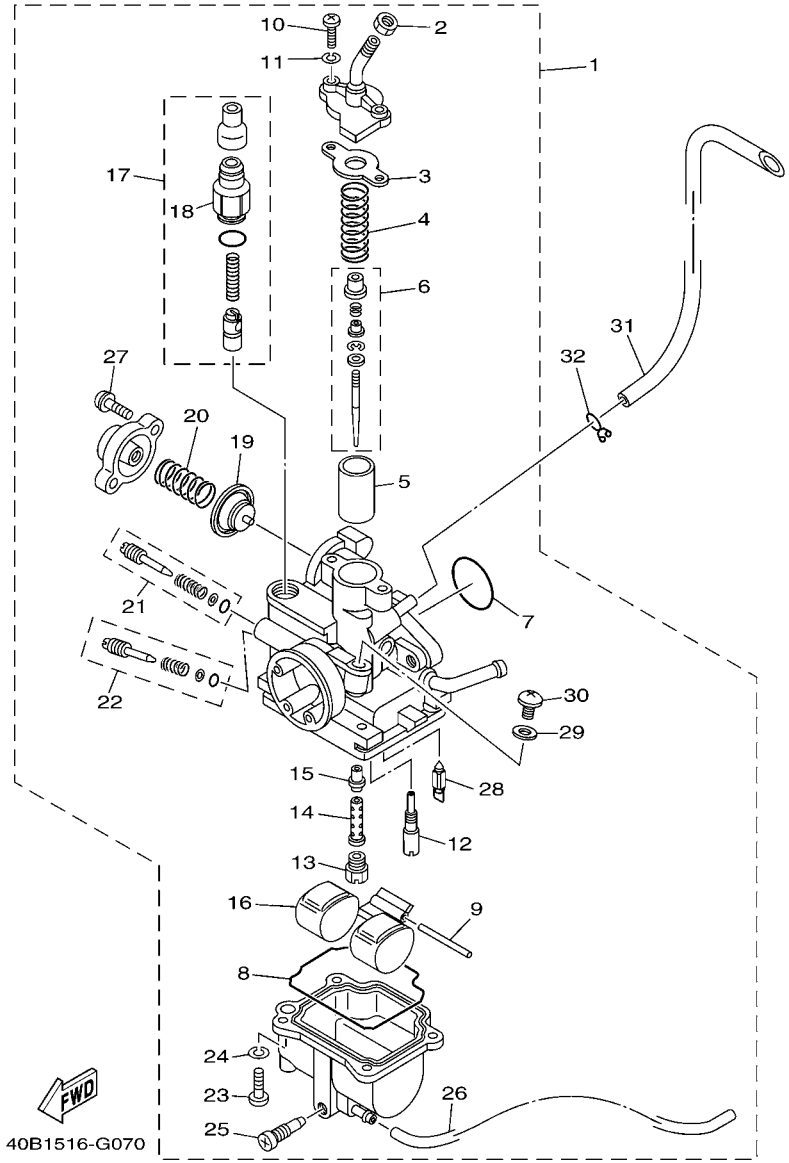


## FIG. 7 CARBURADOR CARBURETOR

| REF. Nº | CODIGO Nº PART NO. | DESCRIPCION DESCRIPTION | 40B3 | | | | | OBSERVACIONES REMARKS |
|---|---|---|---|---|---|---|---|---|
| 1 | 4S9–E4101–00 | CARBURADOR COMPLETO 1<br>CARBURETOR ASSY 1 | 1 | | | | | |
| 2 | 802–14161–00 | .TUERCA AJUSTADOR DE CABLE<br>.NUT, CABLE ADJUSTING | 1 | | | | | |
| 3 | 4NM–14198–00 | .EMPAQUE<br>.GASKET | 1 | | | | | |
| 4 | 5TN–14131–00 | .RESORTE VALVULA DE ACELERACION<br>.SPRING, THROTTLE VALVE | 1 | | | | | |
| 5 | 5TN–14112–00 | .VALVULA DE ACELERACION 1<br>.VALVE, THROTTLE 1 | 1 | | | | | |
| 6 | 4S9–1490J–00 | .CJTO. AGUJA<br>.NEEDLE SET | 1 | | | | | |
| 7 | 5TN–14147–00 | .ANILLO O<br>.O-RING | 1 | | | | | |
| 8 | 4GL–14239–00 | .SELLO<br>.SEAL | 1 | | | | | |
| 9 | 353–14186–00 | .PASADOR DE LA BOYA<br>.PIN, FLOAT | 1 | | | | | |
| 10 | 98507–04012 | .TORNILLO DE CABEZA PLANA<br>.SCREW, PAN HEAD | 2 | | | | | |
| 11 | 92907–04100 | .ARANDELA DE RESORTE<br>.WASHER, SPRING | 2 | | | | | |
| 12 | 2MM–14142–17 | .SURTIDOR DE RALENTI (# 17.5)<br>.JET, PILOT (# 17.5) | 1 | | | | | |
| 13 | 18A–14143–21 | .SURTIDOR, PRINCIPAL (#105)<br>.JET, MAIN (#105) | 1 | | | | | |
| 14 | 5TN–14148–00 | .TUBO<br>.PIPE | 1 | | | | | |
| 15 | 4S9–14141–18 | .BOQUILLA PRINCIPAL<br>.NOZZLE, MAIN | 1 | | | | | |
| 16 | 4GL–14185–00 | .BOYA<br>.FLOAT | 1 | | | | | |
| 17 | 5TN–1410A–10 | .JUEGO DE ARRANQUE<br>.STARTER SET | 1 | | | | | |
| 18 | 3RW–14174–00 | ..TAPA DE EMBOLO<br>..CAP, PLUNGER | 1 | | | | | |
| 19 | 5TN–14940–00 | .DIAFRAGMA COMPLETO<br>.DIAPHRAGM ASSY | 1 | | | | | |
| 20 | 5TN–24423–00 | .RESORTE DE DIAFRAGMA<br>.SPRING, DIAPHRAGM | 1 | | | | | |
| 21 | 4GL–14104–00 | .CJTO. TORNNILLO DE AIRE<br>.AIR SCREW SET | 1 | | | | | |
| 22 | 5TN–14103–00 | .CJTO. TORNILLO DEL RALENTI<br>.THROTTLE SCREW SET | 1 | | | | | |
| 23 | 98507–04014 | .TORNILLO DE CABEZA PLANA<br>.SCREW, PAN HEAD | 4 | | | | | |
| 24 | 92907–04100 | .ARANDELA DE RESORTE<br>.WASHER, SPRING | 4 | | | | | |
| 25 | 5LW–14191–00 | .TORNILLO, DE DRENAJE<br>.PLUG, DRAIN | 1 | | | | | |
| 26 | 32N–14196–00 | .TUBO DE DRENASE<br>.PIPE, OVER FLOW 1 | 1 | | | | | |
| 27 | 5TN–14216–00 | .TORNILLO<br>.SCREW | 2 | | | | | |

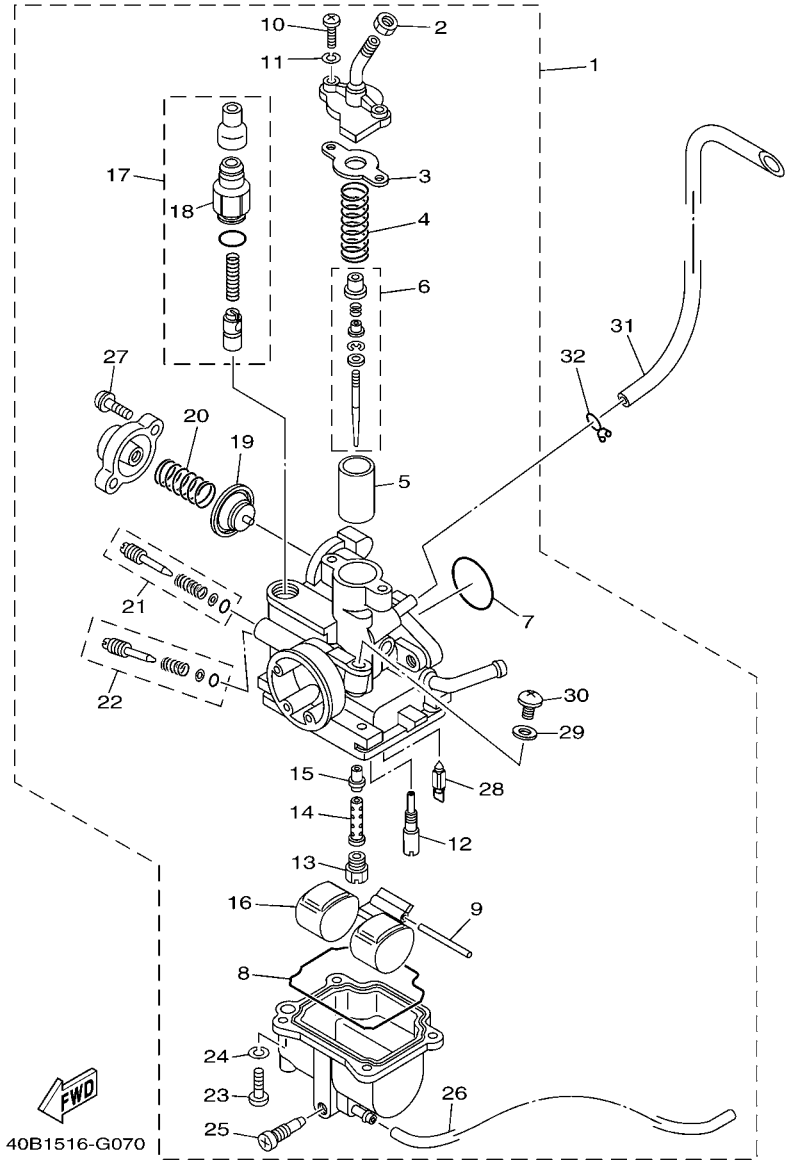


## FIG. 7 CARBURADOR CARBURETOR

| REF. Nº | CODIGO Nº PART NO. | DESCRIPCION DESCRIPTION | 40B3 | | | | | OBSERVACIONES REMARKS |
|---|---|---|---|---|---|---|---|---|
| 28 | 5TN–14150–10 | .AGUJA DEL CARB.<br>.NEEDLE ASSY | 1 | | | | | |
| 29 | 256–14956–01 | .ARANDELA<br>.WASHER | 1 | | | | | |
| 30 | 3DM–14216–00 | .TORNILLO<br>.SCREW | 1 | | | | | |
| 31 | 4S9–E4197–00 | TUBO RESPIRADERO<br>PIPE | 1 | | | | | |
| 32 | 90467–07029 | PRESILLA<br>CLIP | 1 | | | | | |

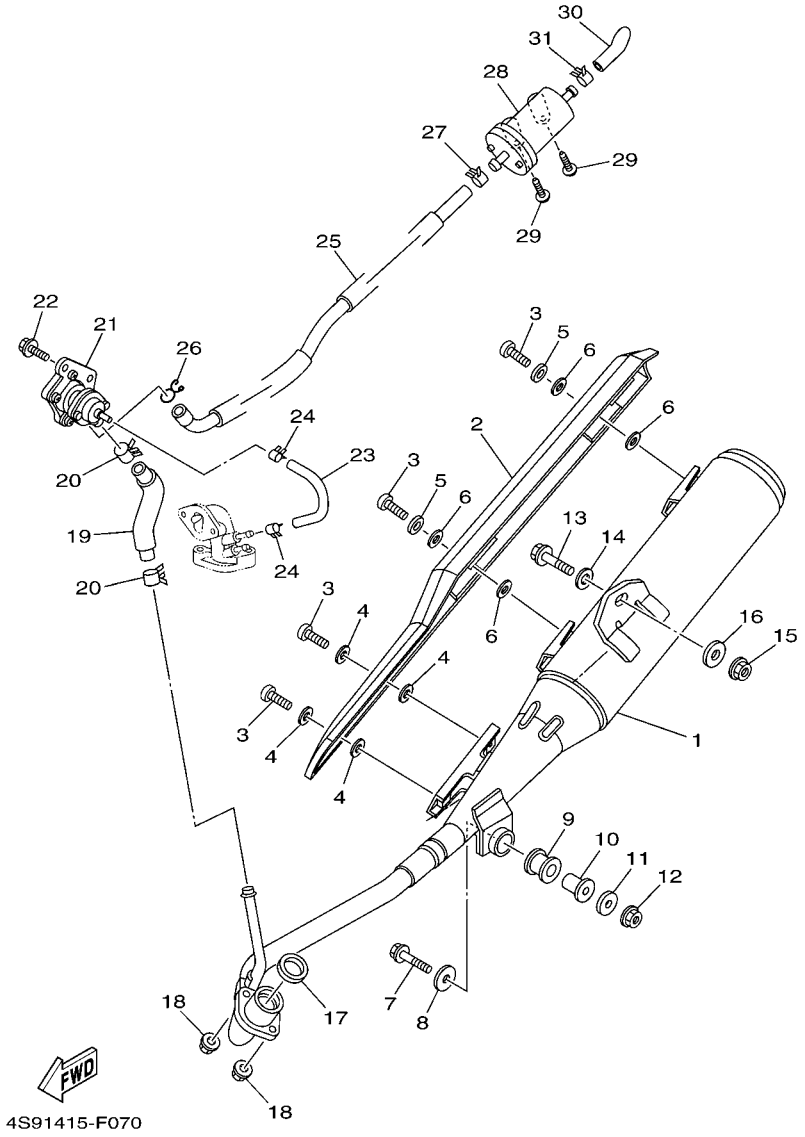


## FIG. 8 DESCARGA EXHAUST

| REF. Nº | CODIGO Nº PART NO. | DESCRIPCION DESCRIPTION | 40B3 | | | | | OBSERVACIONES REMARKS |
|---|---|---|---|---|---|---|---|---|
| 1 | 4S9–E4711–10 | SILENCIADOR 1<br>MUFFLER 1 | 1 | | | | | |
| 2 | 4S9–E4718–00 | PROTECTOR DE SILENCIADOR 1<br>PROTECTOR, MUFFLER 1 | 1 | | | | | |
| 3 | 98980–06012 | TORNILLO DE LIGAR<br>SCREW, BIND | 4 | | | | | |
| 4 | 4S9–E4766–00 | ARANDELA DE PROTECTOR<br>WASHER, PROTECTOR | 4 | | | | | |
| 5 | 90201–06557 | ARANDELA PLANA<br>WASHER, PLATE | 2 | | | | | |
| 6 | 5WB–E4766–10 | ARANDELA DE PROTECTOR<br>WASHER, PROTECTOR | 4 | | | | | |
| 7 | 95807–08045 | TORNILLO<br>BOLT, FLANGE | 1 | | | | | |
| 8 | 90201–08612 | ARANDELA PLANA<br>WASHER, PLATE | 1 | | | | | |
| 9 | 4S9–E4747–10 | AMORTIGUADOR DE SILENCIADOR<br>DAMPER, MUFFLER | 1 | | | | | |
| 10 | 90387–10817 | ESPACIADOR<br>COLLAR | 1 | | | | | |
| 11 | 90201–083A8 | ARANDELA PLANA<br>WASHER, PLATE | 1 | | | | | |
| 12 | 95707–08500 | TUERCA DE BRIDA<br>NUT, FLANGE | 1 | | | | | |
| 13 | 95827–10045 | TORNILLO<br>BOLT, FLANGE | 1 | | | | | |
| 14 | 92907–10200 | ARANDELA<br>WASHER, PLAIN | 1 | | | | | |
| 15 | 95707–10500 | TUERCA DE BRIDA<br>NUT, FLANGE | 1 | | | | | |
| 16 | 90201–10669 | ARANDELA PLANA<br>WASHER, PLATE | 1 | | | | | |
| 17 | 4S9–E4613–00 | JUNTA, TUBO DE ESCAPE<br>GASKET, EXHAUST PIPE | 1 | | | | | |
| 18 | 95707–06500 | TUERCA DE BRIDA<br>NUT, FLANGE | 2 | | | | | |
| 19 | 4S9–E4881–00 | TUBO 1<br>HOSE, BEND 1 | 1 | | | | | |
| 20 | 90467–16800 | PRESILLA<br>CLIP | 2 | | | | | |
| 21 | 4S9–E4803–00 | VALVULA DE AIRE COMPLETA<br>AIR INDUCTION SYSTEM ASSY | 1 | | | | | |
| 22 | 95807–06012 | TORNILLO<br>BOLT, FLANGE | 2 | | | | | |
| 23 | 4S9–E3542–00 | MANGUERA, DE VACIO 1<br>HOSE, VACUUM SENSING 1 | 1 | | | | | |
| 24 | 90467–08801 | PRESILLA<br>CLIP | 2 | | | | | |
| 25 | 4S9–E4882–00 | TUBO 2<br>HOSE, BEND 2 | 1 | | | | | |
| 26 | 90467–15012 | PRESILLA<br>CLIP | 1 | | | | | |
| 27 | 90467–13814 | PRESILLA<br>CLIP | 1 | | | | | |

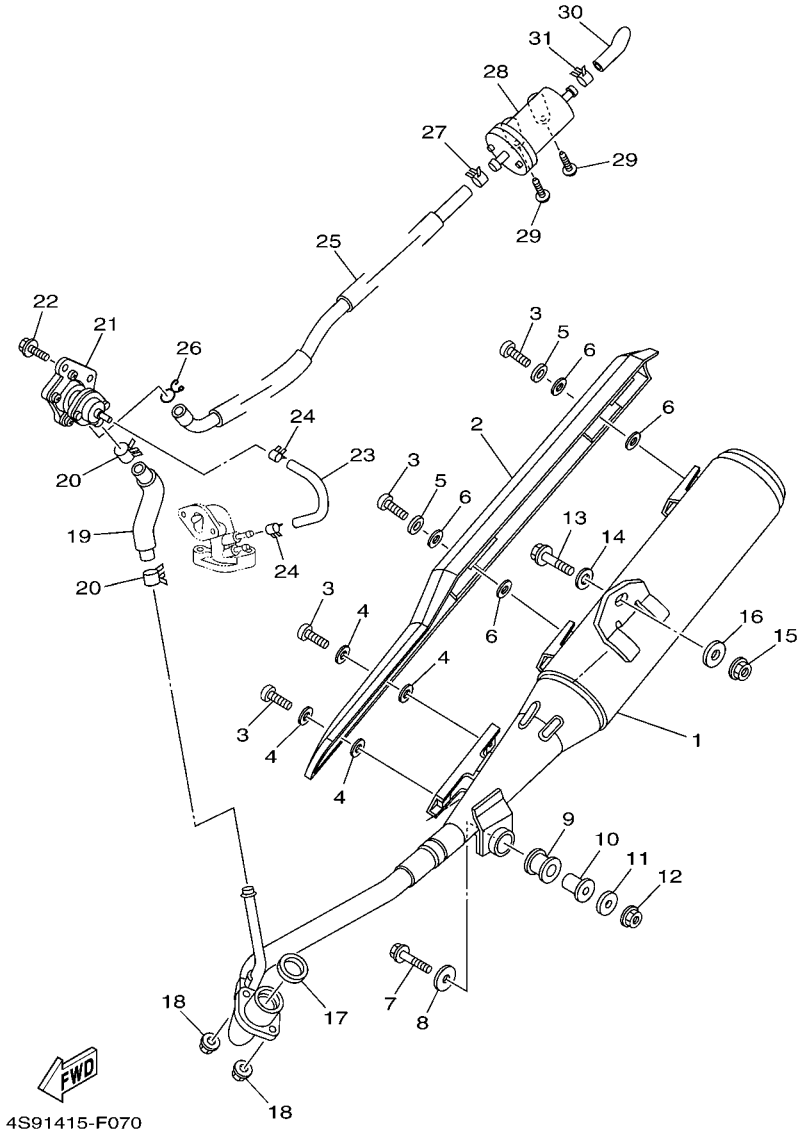


## FIG. 8 DESCARGA EXHAUST

| REF. Nº | CODIGO Nº PART NO. | DESCRIPCION DESCRIPTION | 40B3 | | | | | OBSERVACIONES REMARKS |
|---|---|---|---|---|---|---|---|---|
| 28 | 4S9–E4806–00 | FILTRO DE AIRE COMPLETO<br>AIR FILTER | 1 | | | | | |
| 29 | 97707–50016 | TORNILLO<br>SCREW, TRUSS HEAD TAPPING | 2 | | | | | |
| 30 | 4S9–E4883–00 | TUBO 3<br>HOSE, BEND 3 | 1 | | | | | |
| 31 | 90467–13814 | PRESILLA<br>CLIP | 1 | | | | | |

## FIG. 9 CARTER — CRANKCASE

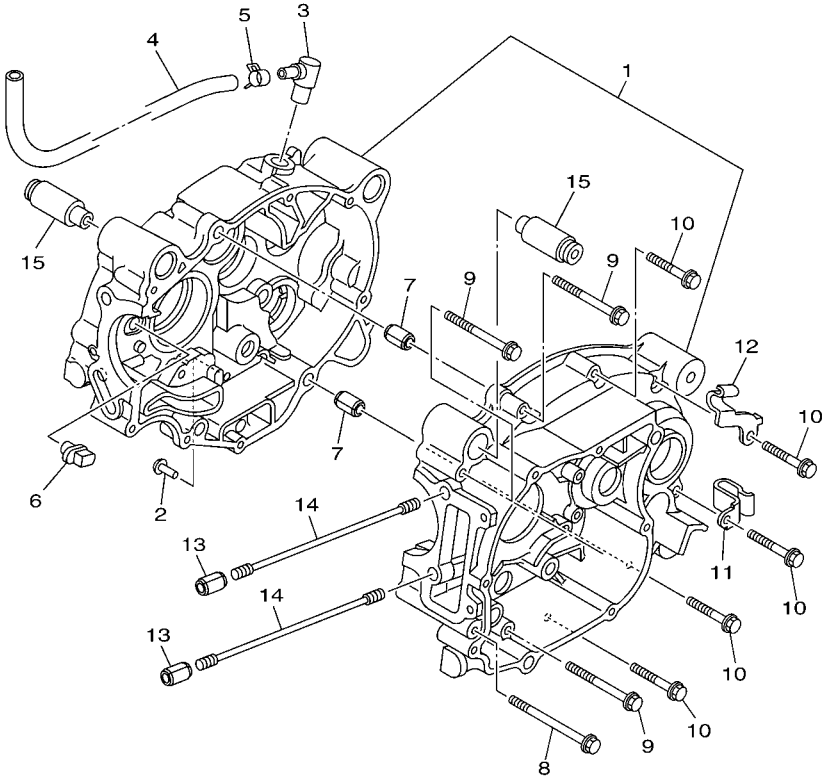

1DU1600-J090

| REF. Nº | CODIGO Nº PART NO. | DESCRIPCION DESCRIPTION | 40B3 | | | | | OBSERVACIONES REMARKS |
|---|---|---|---|---|---|---|---|---|
| 1 | 4S9–E5150–00 | CARTER COMPLETO<br>CRANKCASE ASSY | 1 | | | | | |
| 2 | 4S9–E6346–00 | GANCHO DE RESORTE<br>HOOK, SPRING | 1 | | | | | |
| 3 | 4S9–E5371–00 | RESPIRADERO<br>BREATHER | 1 | | | | | |
| 4 | 4S9–E1166–00 | TUBO RESPIRADERO 1<br>PIPE, BREATHER 1 | 1 | | | | | |
| 5 | 90467–13064 | PRESILLA<br>CLIP | 1 | | | | | |
| 6 | 4S9–E5155–00 | BOQUILLA 3<br>NOZZLE 3 | 1 | | | | | |
| 7 | 99530–10114 | PASADOR, DE ESPIGA<br>PIN, DOWEL | 2 | | | | | |
| 8 | 95027–06080 | PERNO, DE BRIDA<br>BOLT, FLANGE | 1 | | | | | |
| 9 | 95027–06060 | PERNO, DE BRIDA<br>BOLT, FLANGE | 3 | | | | | |
| 10 | 95027–06040 | PERNO, DE BRIDA<br>BOLT, FLANGE | 5 | | | | | |
| 11 | 90465–10833 | BRIDA<br>CLAMP | 1 | | | | | |
| 12 | 90462–10801 | BRIDA<br>CLAMP | 1 | | | | | |
| 13 | 99530–10114 | PASADOR, DE ESPIGA<br>PIN, DOWEL | 2 | | | | | |
| 14 | 90116–08824 | ESPARRAGO<br>BOLT, STUD | 4 | | | | | |
| 15 | 4S9–E5316–00 | AMORTIGUADOR 1<br>DAMPER 1 | 2 | | | | | |

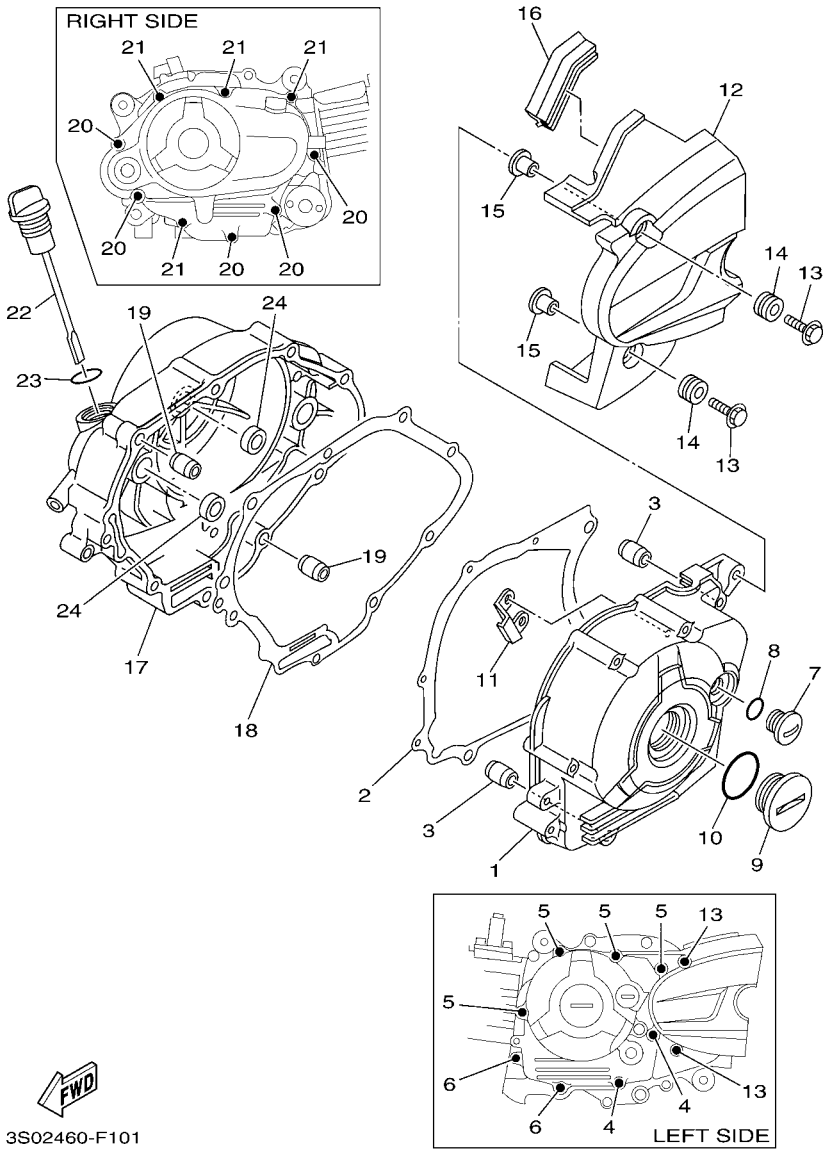


## FIG. 10 CUBIERTA DE CARTER 1 CRANKCASE COVER 1

| REF. Nº | CODIGO Nº PART NO. | DESCRIPCION DESCRIPTION | 40B3 | | | | | OBSERVACIONES REMARKS |
|---|---|---|---|---|---|---|---|---|
| 1 | 4S9–E5411–00 | CUBIERTA DE CARTER 1<br>COVER, CRANKCASE 1 | 1 | | | | | |
| 2 | 4S9–E5451–00 | EMPAQ DE CUBIERTA DE CARTER<br>GASKET, CRANKCASE COVER 1 | 1 | | | | | |
| 3 | 99530–10114 | PASADOR, DE ESPIGA<br>PIN, DOWEL | 2 | | | | | |
| 4 | 95027–06040 | PERNO, DE BRIDA<br>BOLT, FLANGE | 2 | | | | | |
| 5 | 95027–06050 | PERNO, DE BRIDA<br>BOLT, FLANGE | 4 | | | | | |
| 6 | 95027–06080 | PERNO, DE BRIDA<br>BOLT, FLANGE | 2 | | | | | |
| 7 | 90340–14818 | TORNILLO, DE DRENAJE<br>PLUG, STRAIGHT SCREW | 1 | | | | | |
| 8 | 93210–14899 | ANILLO O<br>O-RING | 1 | | | | | |
| 9 | 90340–32813 | TORNILLO, DE DRENAJE<br>PLUG, STRAIGHT SCREW | 1 | | | | | |
| 10 | 93210–328A4 | ANILLO O<br>O-RING | 1 | | | | | |
| 11 | 4S9–E5113–00 | PLACA<br>PLATE | 1 | | | | | |
| 12 | 4S9–E5418–00 | CUBIERTA CAJA DE CADENA<br>COVER, CHAIN CASE | 1 | | | | | |
| 13 | 95807–06025 | TORNILLO<br>BOLT, FLANGE | 2 | | | | | |
| 14 | 90480–13568 | TAPON<br>GROMMET | 2 | | | | | |
| 15 | 90387–06063 | ESPACIADOR<br>COLLAR | 2 | | | | | |
| 16 | 4S9–E5492–00 | CUBIERTA<br>COVER | 1 | | | | | |
| 17 | 4S9–E5421–00 | TAPA DE CARTER DERECHA<br>COVER, CRANKCASE 2 | 1 | | | | | |
| 18 | 4S9–E5461–00 | JUNTA TAPA CARTER DERECHO 2<br>GASKET, CRANKCASE COVER 2 | 1 | | | | | |
| 19 | 99530–10114 | PASADOR, DE ESPIGA<br>PIN, DOWEL | 2 | | | | | |
| 20 | 95027–06040 | PERNO, DE BRIDA<br>BOLT, FLANGE | 5 | | | | | |
| 21 | 95027–06050 | PERNO, DE BRIDA<br>BOLT, FLANGE | 4 | | | | | |
| 22 | 4S9–E5362–00 | TAPON DEL NIVEL DE ACEITE<br>PLUG, OIL LEVEL | 1 | | | | | |
| 23 | 93210–19809 | ANILLO O<br>O-RING | 1 | | | | | |
| 24 | 93101–10800 | SELLO ACEITE<br>OIL SEAL | 2 | | | | | |

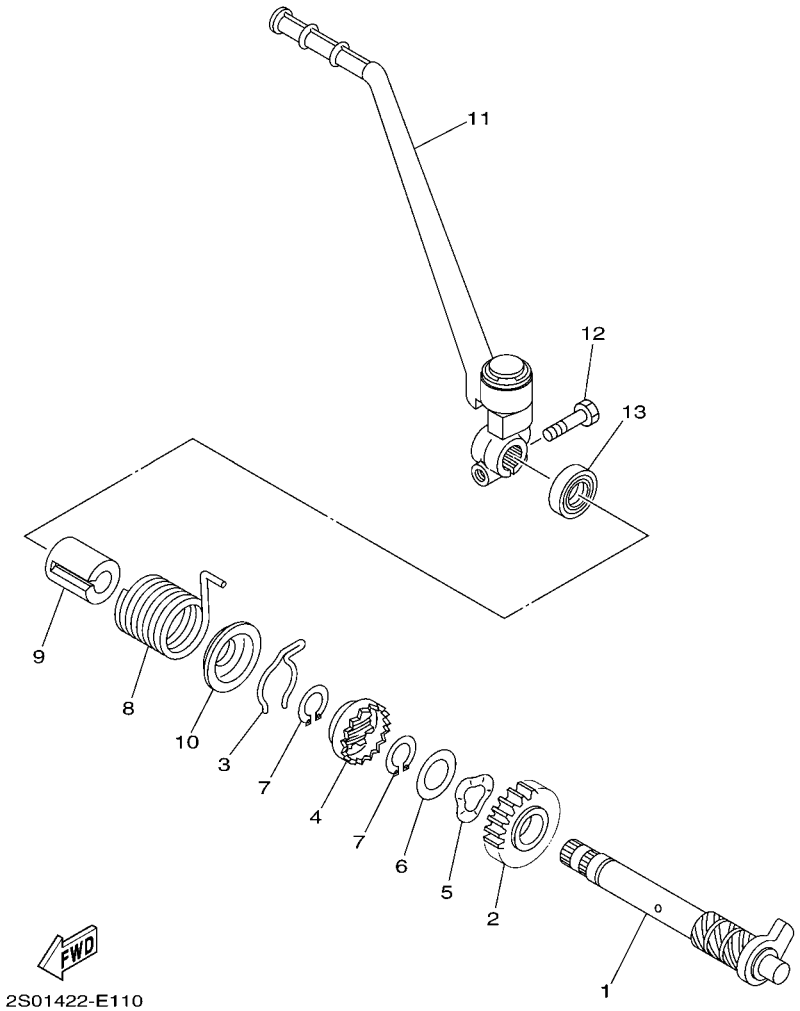


## FIG. 11 ARRANQUE STARTER

| REF. Nº | CODIGO Nº PART NO. | DESCRIPCION DESCRIPTION | 40B3 | | | | | OBSERVACIONES REMARKS |
|---|---|---|---|---|---|---|---|---|
| 1 | 4S9–E5660–00 | EJE DEL PEDAL DE ARRAN.COMPLET<br>KICK AXLE ASSY | 1 | | | | | |
| 2 | 4S9–E5641–00 | ENGRANAJE PEDAL ARRANQUE<br>GEAR, KICK | 1 | | | | | |
| 3 | 90468–26800 | PRESILLA<br>CLIP | 1 | | | | | |
| 4 | 4S9–E5671–00 | RUEDA DE TRINQUETE<br>WHEEL, RATCHET | 1 | | | | | |
| 5 | 90206–19027 | ARANDELA ONDULADA<br>WASHER, WAVE | 1 | | | | | |
| 6 | 4S9–E5644–00 | CUNA<br>SHIM | 1 | | | | | |
| 7 | 99009–19400 | PRESILLA REDONDA<br>CIRCLIP | 2 | | | | | |
| 8 | 90508–26810 | RESORTE DE TORSION<br>SPRING, TORSION | 1 | | | | | |
| 9 | 4S9–E5664–00 | GUIA DE RESORTE<br>GUIDE, SPRING | 1 | | | | | |
| 10 | 4S9–E5664–10 | GUIA DE RESORTE<br>GUIDE, SPRING | 1 | | | | | |
| 11 | 4S9–E5620–00 | PEDAL DE ARRANQUE COMPLETO<br>KICK CRANK ASSY | 1 | | | | | |
| 12 | 97017–06025 | PERNO<br>BOLT | 1 | | | | | |
| 13 | 93102–15807 | SELLO ACEITE<br>OIL SEAL | 1 | | | | | |

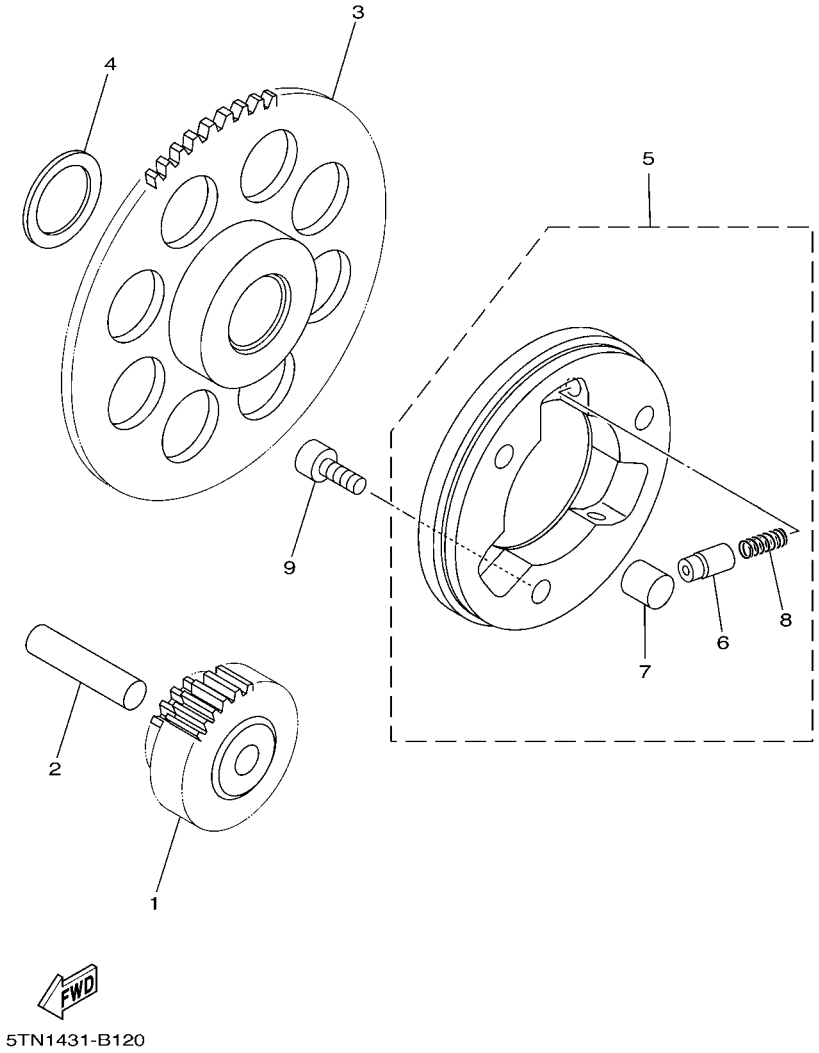


## FIG. 12 EMBRAGUE DEL ARRANQUE STARTER CLUTCH

| REF. Nº | CODIGO Nº PART NO. | DESCRIPCION DESCRIPTION | 40B3 | | | | | OBSERVACIONES REMARKS |
|---|---|---|---|---|---|---|---|---|
| 1 | 4S9–E5512–00 | ENGRENAJE NEUTRO<br>GEAR, IDLER 1 | 1 | | | | | |
| 2 | 93608–43800 | PASADOR DE CLAVIJA<br>PIN, DOWEL | 1 | | | | | |
| 3 | 4S9–E5524–00 | RUEDA DE ARRANQUE<br>WHEEL, STARTER | 1 | | | | | |
| 4 | 4S9–E5644–00 | CUNA<br>SHIM | 1 | | | | | |
| 5 | 4S9–E5580–00 | ENSAMBLE EXT.EMBRAGUE ARRANQUE<br>STARTER CLUTCH OUTER ASSY | 1 | | | | | |
| 6 | 4S9–E5583–00 | .TAPA RESORTE EMBRAG.ARRANQ.<br>.CAP, STARTER CLUTCH SPRING | 3 | | | | | |
| 7 | 93610–10174 | .PASADOR DE CLAVIJA<br>.PIN, DOWEL | 3 | | | | | |
| 8 | 90501–02639 | .RESORTE DE COMPRESION<br>.SPRING, COMPRESSION | 3 | | | | | |
| 9 | 91317–06012 | PERNO<br>BOLT | 3 | | | | | |

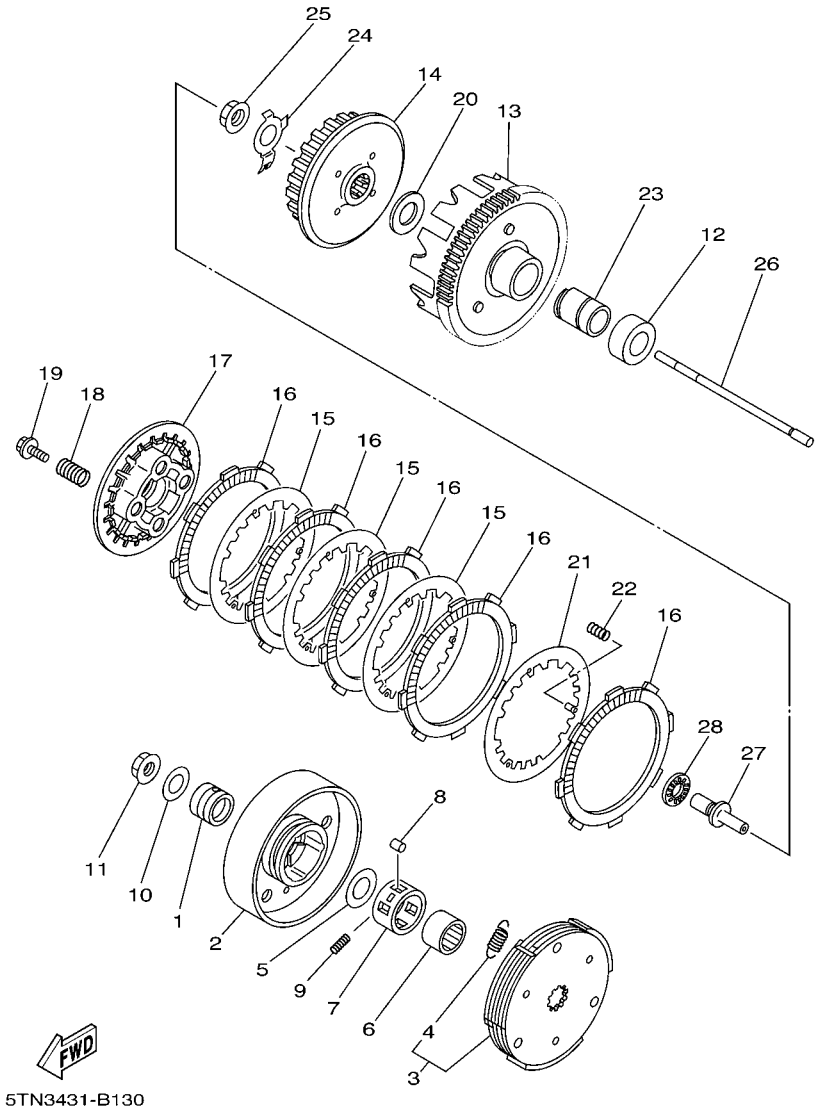


## FIG. 13 EMBRAGUE CLUTCH

| REF. Nº | CODIGO Nº PART NO. | DESCRIPCION DESCRIPTION | 40B3 | | | | | OBSERVACIONES REMARKS |
|---|---|---|---|---|---|---|---|---|
| 1 | 90387–16812 | ESPACIADOR<br>COLLAR | 1 | | | | | |
| 2 | 4S9–E6611–00 | CAJA DE EMBRAGUE COMPLETO<br>CLUTCH HOUSING COMP. | 1 | | | | | |
| 3 | 4S9–E6620–00 | PORTADOR DE EMBRAGUE COMPLETO<br>CLUTCH CARRIER ASSY | 1 | | | | | |
| 4 | 4S9–E6626–00 | .RESORTE CONTRAPESO EMBRAGUE 1<br>.SPRING, CLUTCH WEIGHT 1 | 1 | | | | | |
| 5 | 90201–167P7 | ARANDELA PLANA<br>WASHER, PLATE | 1 | | | | | |
| 6 | 4S9–E6512–00 | COPA DE CAJA DE EMBRAGUE<br>BOSS, CLUTCH HOUSING | 1 | | | | | |
| 7 | 4S9–E6586–00 | MEDITOR<br>CAGE | 1 | | | | | |
| 8 | 93606–10801 | PASADOR DE CLAVIJA<br>PIN, DOWEL | 3 | | | | | |
| 9 | 90501–04802 | RESORTE DE COMPRESION<br>SPRING, COMPRESSION | 1 | | | | | |
| 10 | 90201–12820 | ARANDELA PLANA<br>WASHER, PLATE | 1 | | | | | |
| 11 | 90179–12803 | TUERCA<br>NUT | 1 | | | | | |
| 12 | 90560–17384 | SEPARADOR<br>SPACER | 1 | | | | | |
| 13 | 4S9–E6150–00 | CAMPANA DE EMBRAGUE<br>PRIMARY DRIVEN GEAR COMP. | 1 | | | | | |
| 14 | 4S9–E6371–00 | CUBO, DE EMBRAGUE<br>BOSS, CLUTCH | 1 | | | | | |
| 15 | 4S9–E6324–00 | PLACA DE EMBRAGUE<br>PLATE, CLUTCH 1 | 3 | | | | | |
| 16 | 3S0–E6321–00 | PLACA DE FRICCION<br>PLATE, FRICTION | 5 | | | | | |
| 17 | 4S9–E6351–00 | PLATO DE PRESION<br>PLATE, PRESSURE 1 | 1 | | | | | |
| 18 | 90501–203G2 | RESORTE DE COMPRESION<br>SPRING, COMPRESSION | 4 | | | | | |
| 19 | 90119–05827 | TORNILLO CON ARANDELA<br>BOLT, WITH WASHER | 4 | | | | | |
| 20 | 4S9–E6154–00 | ARANDELA, DE EMPUJE 1<br>PLATE, THRUST 1 | 1 | | | | | |
| 21 | 4S9–E6350–00 | PLACA DE PRESION COMPLETA<br>PRESSURE PLATE ASSY | 1 | | | | | |
| 22 | 90501–050F1 | RESORTE DE COMPRESION<br>SPRING, COMPRESSION | 3 | | | | | |
| 23 | 90387–17805 | ESPACIADOR<br>COLLAR | 1 | | | | | |
| 24 | 4S9–E6135–00 | ARANDELA DE CIERRE<br>WASHER, LOCK | 1 | | | | | |
| 25 | 90179–14803 | TUERCA<br>NUT | 1 | | | | | |
| 26 | 4S9–E6357–00 | VARILLA DE EMPUJE 2<br>ROD, PUSH 2 | 1 | | | | | |
| 27 | 4S9–E6356–00 | VARILLA DE EMPUJE 1<br>ROD, PUSH 1 | 1 | | | | | |

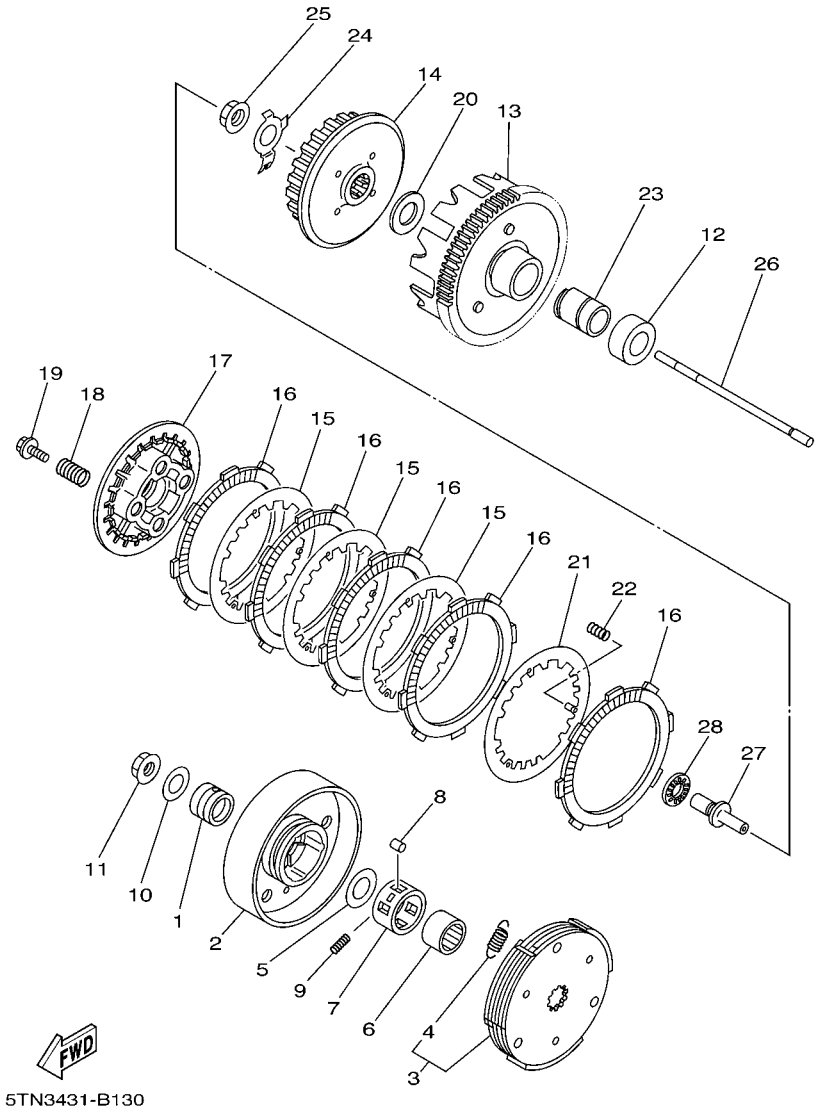


## FIG. 13 EMBRAGUE CLUTCH

| REF. Nº | CODIGO Nº PART NO. | DESCRIPCION DESCRIPTION | 40B3 | | | | | OBSERVACIONES REMARKS |
|---|---|---|---|---|---|---|---|---|
| 28 | 93342–210Y0 | COJINETES CON RODAMIENTOS<br>BEARING | 1 | | | | | |

## FIG. 14 TRANSMISION TRANSMISSION

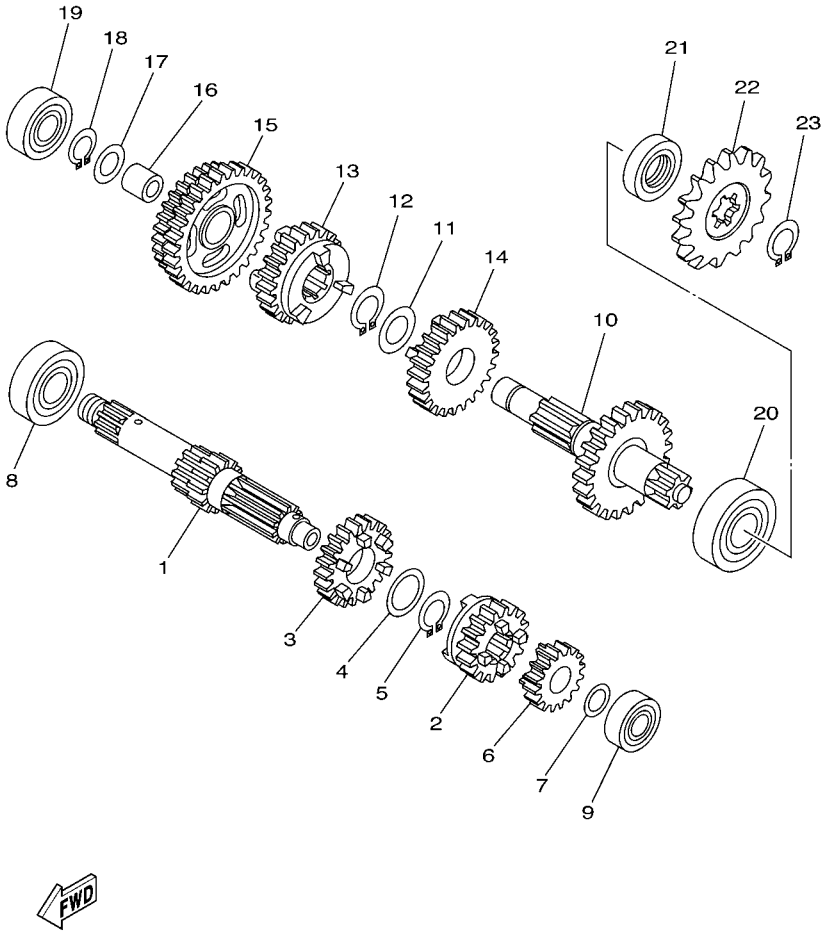


| REF. Nº | CODIGO Nº PART NO. | DESCRIPCION DESCRIPTION | 40B3 | | | | | OBSERVACIONES REMARKS |
|---|---|---|---|---|---|---|---|---|
| 1 | 4S9–E7411–00 | EJE PRIMARIO (12T)<br>AXLE, MAIN (12T) | 1 | | | | | |
| 2 | 4S9–E7131–00 | ENGRANAJE PINON DE 3RA (21T)<br>GEAR, 3RD PINION (21T) | 1 | | | | | |
| 3 | 4S9–E7141–00 | ENGRANAJE PINON DE 4TA (21T)<br>GEAR, 4TH PINION (21T) | 1 | | | | | |
| 4 | 90201–20266 | ARANDELA, PLACA (T=1.0)<br>WASHER, PLATE (T=1.0) | 1 | | | | | |
| 5 | 93410–20809 | SEGURO<br>CIRCLIP | 1 | | | | | |
| 6 | 4S9–E7121–00 | ENGRANAJE DE PINON DE 2DA(17T<br>GEAR, 2ND PINION (17T) | 1 | | | | | |
| 7 | 90201–128C9 | ARANDELA PLANA<br>WASHER, PLATE | 1 | | | | | |
| 8 | 93306–203XE | COJINETE<br>BEARING | 1 | | | | | |
| 9 | 93306–001X8 | COJINETE<br>BEARING | 1 | | | | | |
| 10 | 4S9–E7402–00 | EJE DE TRACCION COMPLETO (33T)<br>DRIVE AXLE ASSY (33T) | 1 | | | | | |
| 11 | 90201–20266 | ARANDELA, PLACA (T=1.0)<br>WASHER, PLATE (T=1.0) | 1 | | | | | |
| 12 | 93410–20809 | SEGURO<br>CIRCLIP | 1 | | | | | |
| 13 | 4S9–E7241–00 | ENGRANAJE DE RUEDA 4TA (23T)<br>GEAR, 4TH WHEEL (23T) | 1 | | | | | |
| 14 | 4S9–E7231–00 | ENGRANAJE RUEDA DE 3RA (29T)<br>GEAR, 3RD WHEEL (29T) | 1 | | | | | |
| 15 | 4S9–E7211–00 | ENGRANAJE RUEDA DE 1 RA 30/38T<br>GEAR, 1ST WHEEL (30T/38T) | 1 | | | | | |
| 16 | 90387–15812 | ESPACIADOR<br>COLLAR | 1 | | | | | |
| 17 | 90201–15700 | ARANDELA PLANA<br>WASHER, PLATE | 1 | | | | | |
| 18 | 99009–15400 | PRESILLA REDONDA<br>CIRCLIP | 1 | | | | | |
| 19 | 93306–252XJ | COJINETE<br>BEARING | 1 | | | | | |
| 20 | 93306–204XF | COJINETE<br>BEARING | 1 | | | | | |
| 21 | 93102–20802 | SELLO ACEITE<br>OIL SEAL | 1 | | | | | |
| 22 | 93822–15817 | CORONA (15T)<br>SPROCKET, DRIVE (15T) | 1 | | | | | |
| 23 | 93410–20809 | SEGURO<br>CIRCLIP | 1 | | | | | |

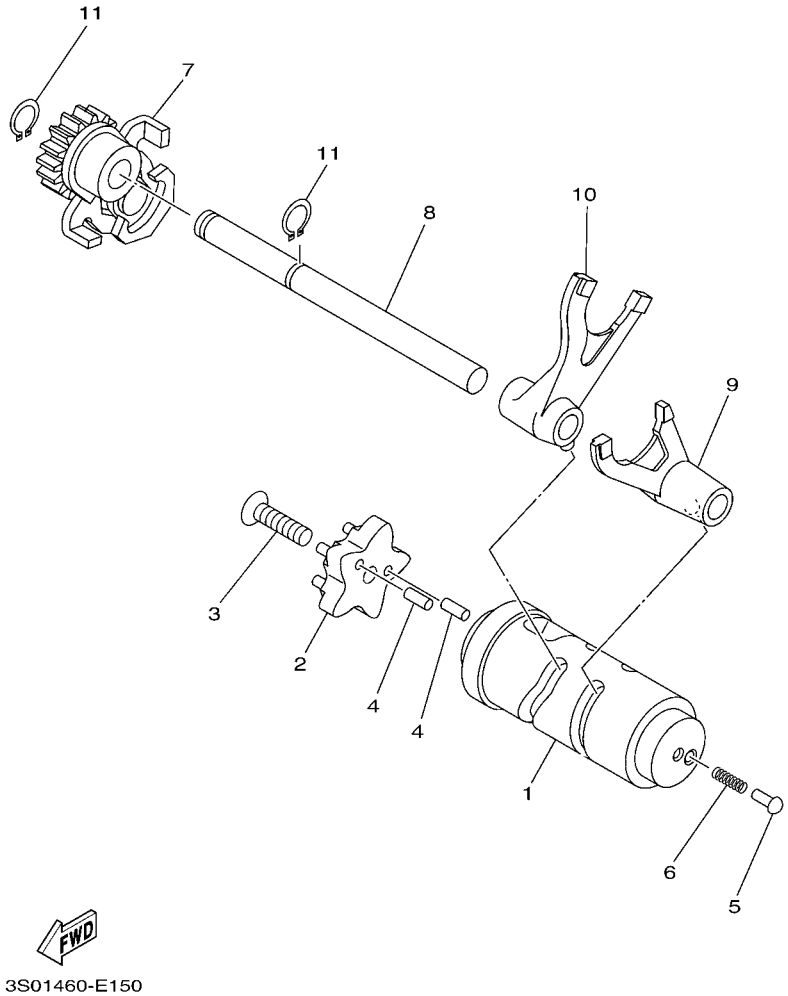


## FIG. 15 LEVA DE CAMBIO & HORQUILLA SHIFT CAM & FORK

| REF. Nº | CODIGO Nº PART NO. | DESCRIPCION DESCRIPTION | 40B3 | | | | | OBSERVACIONES REMARKS |
|---|---|---|---|---|---|---|---|---|
| 1 | 4S9–E8540–00 | LEVA DEL CAMBIO COMPLETA<br>SHIFT CAM ASSY | 1 | | | | | |
| 2 | 4S9–E8185–00 | SEGMENTO DE RETENCION<br>SEGMENT | 1 | | | | | |
| 3 | 92B17–06025 | PERNO<br>BOLT | 1 | | | | | |
| 4 | 93604–12831 | PASADOR DE CLAVIJA<br>PIN, DOWEL | 2 | | | | | |
| 5 | 4S9–E8542–00 | PUNTO MUERTO<br>POINT, NEUTRAL | 1 | | | | | |
| 6 | 90501–06805 | RESORTE DE COMPRESION<br>SPRING, COMPRESSION | 1 | | | | | |
| 7 | 4S9–E8120–00 | PALANCA DE SELECTOR COMPLETO<br>SHIFT LEVER ASSY | 1 | | | | | |
| 8 | 4S9–E8531–00 | BARRA GUIA HORQ. CAMBIO 1<br>BAR, SHIFT FORK GUIDE 1 | 1 | | | | | |
| 9 | 4S9–E8511–00 | HORQUILLA DEL CAMBIO 1<br>FORK, SHIFT 1 | 1 | | | | | |
| 10 | 4S9–E8512–00 | HORQUILLA DEL CAMBIO 2<br>FORK, SHIFT 2 | 1 | | | | | |
| 11 | 99009–10400 | PRESILLA REDONDA<br>CIRCLIP | 2 | | | | | |

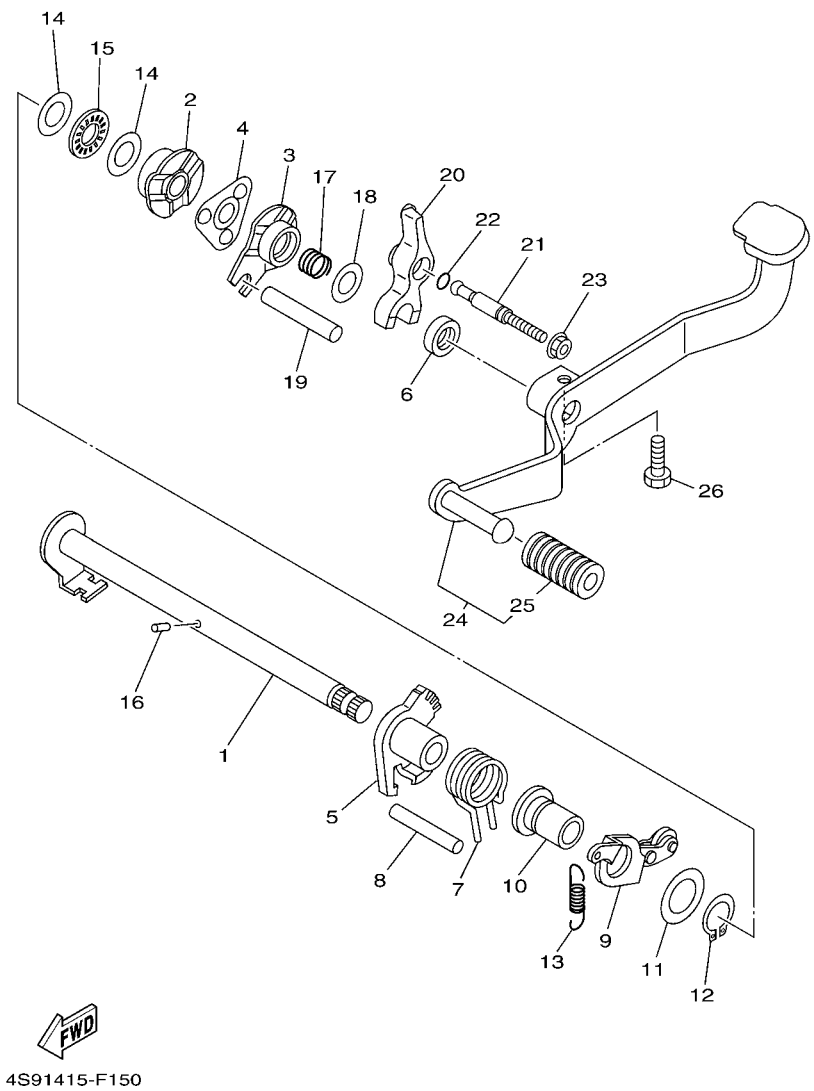


## FIG. 16 EJE DE CAMBIO & PEDAL SHIFT SHAFT

| REF. Nº | CODIGO Nº PART NO. | DESCRIPCION DESCRIPTION | 40B3 | | | | | OBSERVACIONES REMARKS |
|---|---|---|---|---|---|---|---|---|
| 1 | 4S9–E8101–00 | EJE SELECTOR COMPLETO<br>SHIFT SHAFT ASSY | 1 | | | | | |
| 2 | 4S9–E8179–00 | GUIA<br>GUIDE | 1 | | | | | |
| 3 | 4S9–E8172–00 | GUIA DE CAMBIO<br>GUIDE, SHIFT | 1 | | | | | |
| 4 | 4S9–E8181–00 | SOSTEN DE SUJETADOR<br>HOLDER, PAWL | 1 | | | | | |
| 5 | 4S9–E8152–00 | PALANCA DE CAMBIO 4<br>LEVER, SHIFT 4 | 1 | | | | | |
| 6 | 93102–12806 | SELLO ACEITE<br>OIL SEAL | 1 | | | | | |
| 7 | 90508–29007 | RESORTE DE TORSION<br>SPRING, TORSION | 1 | | | | | |
| 8 | 93608–50149 | PASADOR DE CLAVIJA<br>PIN, DOWEL | 1 | | | | | |
| 9 | 4S9–E8140–00 | PALANCA DE TOPE COMPLETA<br>STOPPER LEVER ASSY | 1 | | | | | |
| 10 | 4S9–E8699–00 | COPA 1<br>BOSS 1 | 1 | | | | | |
| 11 | 90201–178D3 | ARANDELA PLANA<br>WASHER, PLATE | 1 | | | | | |
| 12 | 99009–17400 | PRESILLA REDONDA<br>CIRCLIP | 1 | | | | | |
| 13 | 4S9–E8337–00 | RESORTE<br>SPRING | 1 | | | | | |
| 14 | 90201–127F4 | ARANDELA PLANA<br>WASHER, PLATE | 2 | | | | | |
| 15 | 93340–212Y6 | COJINETES CON RODAMIENTOS<br>BEARING | 1 | | | | | |
| 16 | 93604–10837 | PASADOR DE CLAVIJA<br>PIN, DOWEL | 1 | | | | | |
| 17 | 90501–12805 | RESORTE DE COMPRESION<br>SPRING, COMPRESSION | 1 | | | | | |
| 18 | 90201–126A7 | ARANDELA PLANA<br>WASHER, PLATE | 1 | | | | | |
| 19 | 4S9–E8173–00 | PASADOR CAMBIO<br>PIN, SHIFT | 1 | | | | | |
| 20 | 4S9–E817A–00 | BRAZO, DE CAMBIO 3<br>ARM, SHIFT 3 | 1 | | | | | |
| 21 | 4S9–E8186–00 | TORNILLO DE AJUSTE<br>SCREW, ADJUSTING | 1 | | | | | |
| 22 | 93210–06806 | ANILLO O<br>O-RING | 1 | | | | | |
| 23 | 95707–06500 | TUERCA DE BRIDA<br>NUT, FLANGE | 1 | | | | | |
| 24 | 4S9–E8110–00 | PEDAL DE CAMBIO COMPLETO<br>SHIFT PEDAL ASSY | 1 | | | | | |
| 25 | 4S9–E8113–00 | .FUNDA DEL PEDAL DEL CAMBIO<br>.COVER, SHIFT PEDAL | 1 | | | | | |
| 26 | 97027–08020 | PERNO<br>BOLT, HEXAGON | 1 | | | | | |

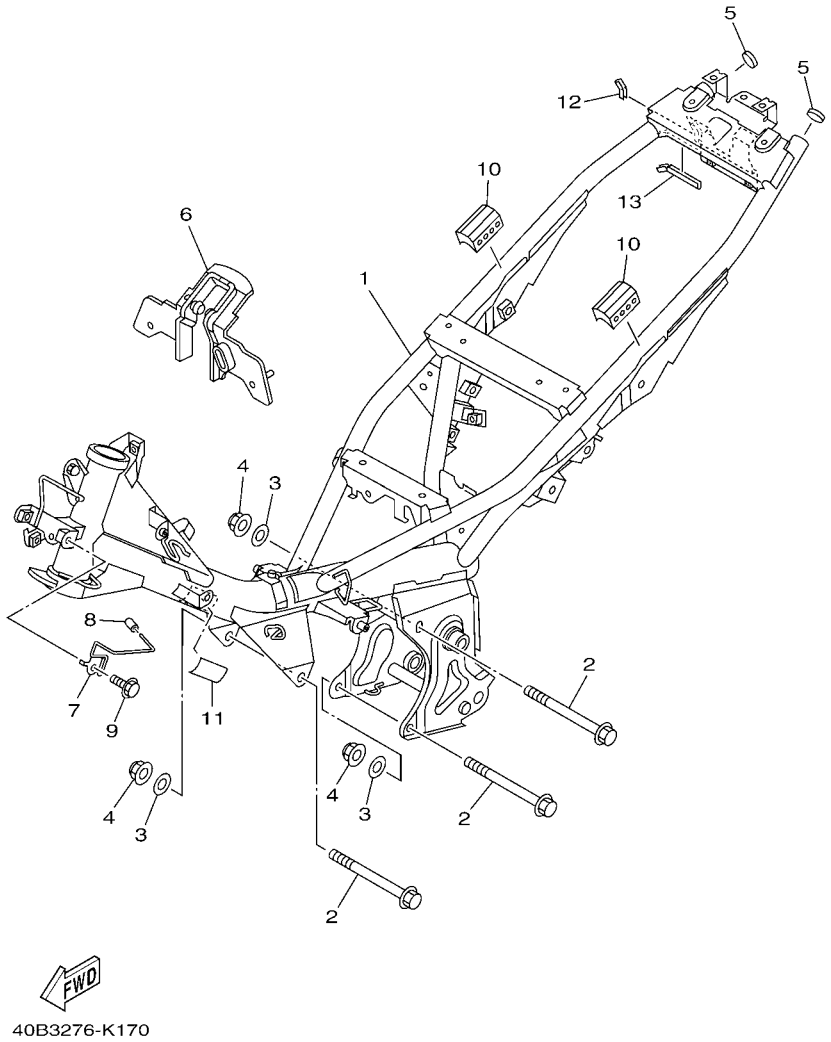


## FIG. 17 CUADRO FRAME

| REF. Nº | CODIGO Nº PART NO. | DESCRIPCION DESCRIPTION | 40B3 | | | | | OBSERVACIONES REMARKS |
|---|---|---|---|---|---|---|---|---|
| 1 | 40B–F1110–02 | ARMAZON COMPLETO<br>FRAME COMP. | 1 | | | | | |
| 2 | 95817–08120 | TORNILLO<br>BOLT, FLANGE | 3 | | | | | |
| 3 | 90201–086P8 | ARANDELA PLANA<br>WASHER, PLATE | 3 | | | | | |
| 4 | 95607–08200 | TUERCA DE AUTO-CIERRE<br>NUT, SELF-LOCKING | 3 | | | | | |
| 5 | 4S9–F139R–00 | CUBIERTA 2<br>COVER 2 | 2 | | | | | |
| 6 | 4S9–F117R–00 | CUBIERTA 4<br>COVER 4 | 1 | | | | | |
| 7 | 4S9–F1679–20 | SOPORTE DE CONJUNT<br>HOLDER, HARNESS | 1 | | | | | |
| 8 | 4S9–F113B–00 | AMORTIGUADOR<br>DAMPER | 1 | | | | | |
| 9 | 95807–06010 | TORNILLO<br>BOLT, FLANGE | 1 | | | | | |
| 10 | 4S9–F139U–00 | AMORTIGUADOR 2<br>DAMPER 2 | 2 | | | | | |
| 11 | 4S9–F111D–00 | SELLO 1<br>SEAL 1 | 1 | | | | | |
| 12 | 90520–02801 | EQUILIBRIO, CUBIERTA<br>DAMPER, PLATE | 1 | | | | | |
| 13 | 90520–02802 | EQUILIBRIO, CUBIERTA<br>DAMPER, PLATE | 1 | | | | | |

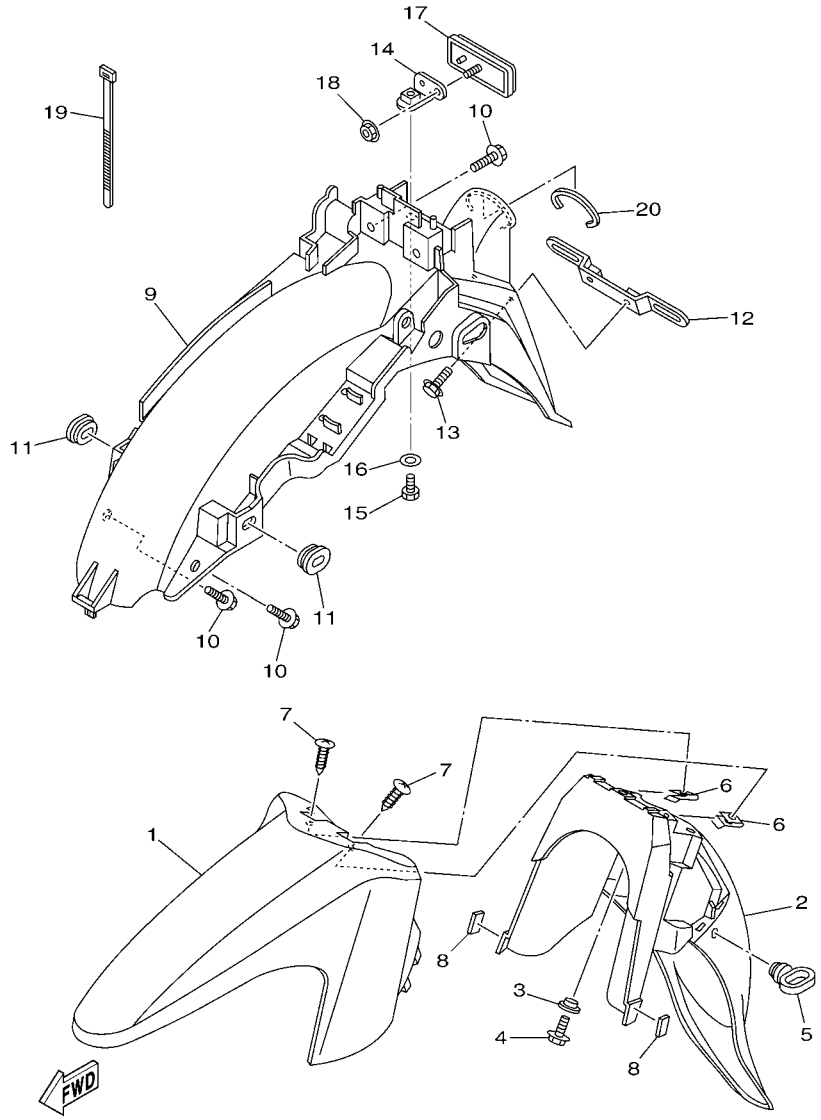


40B1516-G180

## FIG. 18 GUARDABARRO FENDER

| REF. Nº | CODIGO Nº PART NO. | DESCRIPCION DESCRIPTION | 40B3 | | | | | OBSERVACIONES REMARKS |
|---|---|---|---|---|---|---|---|---|
| 1 | 40B–F1511–00–P0 | GUARDABARRO DELANTERO<br>FENDER, FRONT | 1 | | | | | UR PARA DRMK<br>UR FOR DRMK |
| | 40B–F1511–00–P1 | GUARDABARRO DELANTERO<br>FENDER, FRONT | 1 | | | | | UR PARA SMX<br>UR FOR SMX |
| | 40B–F1511–00–P3 | GUARDABARRO DELANTERO<br>FENDER, FRONT | 1 | | | | | UR PARA DPBMC<br>UR FOR DPBMC |
| 2 | 4S9–F1556–01 | GUARDABARRO, DELANTERO 2<br>FENDER, FRONT 2 | 1 | | | | | |
| 3 | 90387–06681 | ESPACIADOR<br>COLLAR | 3 | | | | | |
| 4 | 97527–06520 | PERNO CON ARANDELA<br>BOLT, WITH WASHER | 3 | | | | | |
| 5 | 4S9–F1518–01 | SOPORTE DE CABLE<br>HOLDER, CABLE | 1 | | | | | |
| 6 | 90183–05807 | TUERCA DE RESORTE<br>NUT, SPRING | 2 | | | | | |
| 7 | 97707–50014 | TORNILLO<br>SCREW, TRUSS HEAD TAPPING | 2 | | | | | |
| 8 | 4S9–F8371–00 | AMORTIGUADOR<br>DAMPER | 2 | | | | | |
| 9 | 40B–F1611–01 | GUARDABARRO TRASERO<br>FENDER, REAR | 1 | | | | | |
| 10 | 90119–06869 | TORNILLO CON ARANDELA<br>BOLT, WITH WASHER | 4 | | | | | |
| 11 | 90480–01559 | TAPON<br>GROMMET | 2 | | | | | |
| 12 | 40B–F1685–00 | SOPORTE DE LICENCIA<br>BRACKET, LICENSE | 1 | | | | | |
| 13 | 90119–06205 | TORNILLO CON ARANDELA<br>BOLT, WITH WASHER | 2 | | | | | |
| 14 | 40B–F113J–00 | SOPORTE, REFLECTOR 1<br>BRACKET, REFLECTOR 1 | 1 | | | | | |
| 15 | 97007–05012 | PERNO<br>BOLT | 1 | | | | | |
| 16 | 92907–05200 | ARANDELA<br>WASHER | 1 | | | | | |
| 17 | 4P7–H5130–01 | REFLECTOR TRASERO COMPLETO<br>REAR REFLECTOR ASSY | 1 | | | | | |
| 18 | 95707–05500 | TUERCA DE BRIDA<br>NUT, FLANGE | 1 | | | | | |
| 19 | 4S9–H3936–00 | BANDA DE CABLE DE INTERRUPTOR<br>BAND, SWITCH CORD | 1 | | | | | |
| 20 | 90520–05804 | EQUILIBRIO, CUBIERTA<br>DAMPER, PLATE | 1 | | | | | |

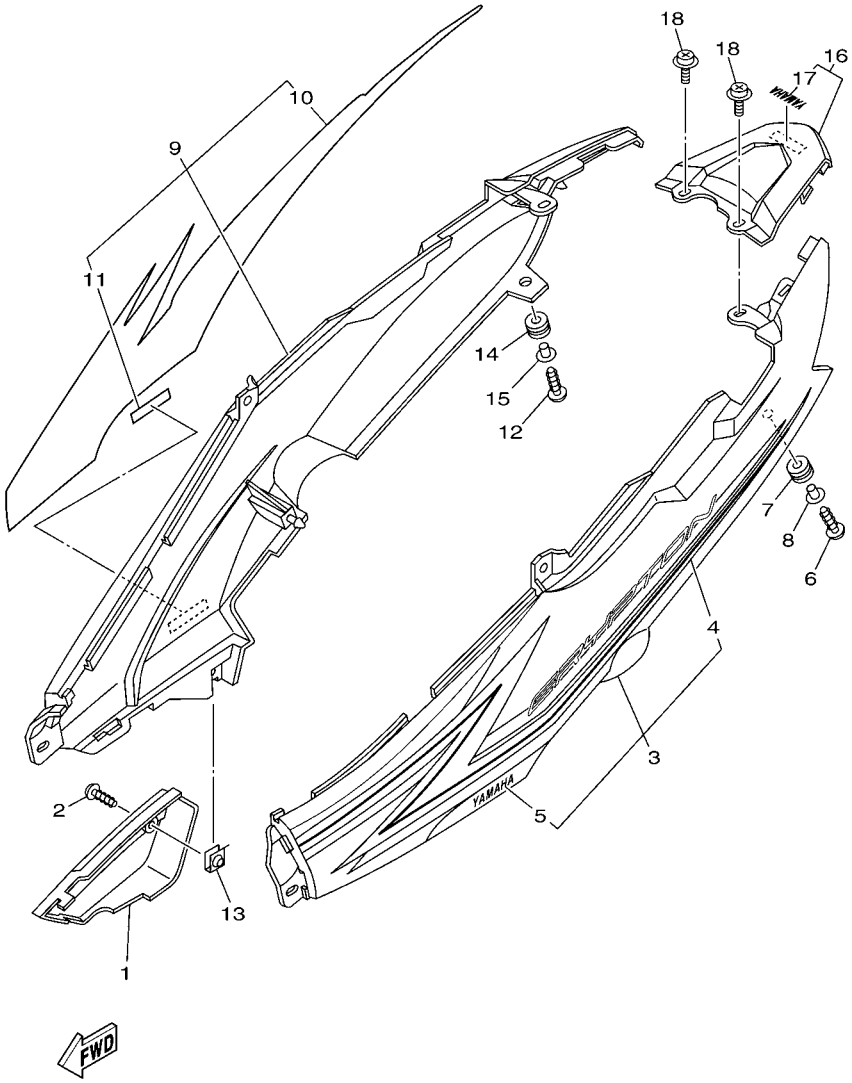


## FIG. 19 CUBIERTA LATERAL SIDE COVER

| REF. Nº | CODIGO Nº PART NO. | DESCRIPCION DESCRIPTION | 40B3 | | | | | OBSERVACIONES REMARKS |
|---|---|---|---|---|---|---|---|---|
| 1 | 4S9–F1721–00 | CUBIERTA LATERAL 2<br>COVER, SIDE 2 | 1 | | | | | |
| 2 | 97707–50014 | TORNILLO<br>SCREW, TRUSS HEAD TAPPING | 1 | | | | | |
| 3 | 4S9–XF173–10–P0 | TAPA LATERAL 3<br>COVER, SIDE 3 | 1 | | | | | UR PARA DRMK<br>UR FOR DRMK |
| | 4S9–XF173–10–P1 | TAPA LATERAL 3<br>COVER, SIDE 3 | 1 | | | | | UR PARA SMX<br>UR FOR SMX |
| | 4S9–XF173–10–P3 | TAPA LATERAL 3<br>COVER, SIDE 3 | 1 | | | | | UR SMX PARA DPBMC<br>UR SMX FOR DPBMC |
| 4 | 4S9–F173E–30 | .GRAFICO, 1<br>.GRAPHIC, 1 | 1 | | | | | UR PARA DRMK<br>UR FOR DRMK |
| | 4S9–F173E–40 | .GRAFICO, 1<br>.GRAPHIC, 1 | 1 | | | | | UR PARA SMX<br>UR FOR SMX |
| | 4S9–F173E–50 | .GRAFICO, 1<br>.GRAPHIC, 1 | 1 | | | | | UR PARA DPBMC<br>UR FOR DPBMC |
| 5 | 99246–00100 | .EMBLEMA, YAMAHA<br>.EMBLEM, YAMAHA | 1 | | | | | |
| 6 | 97707–50025 | TORNILLO ROSCA HEMBRA<br>SCREW, TAPPING | 1 | | | | | |
| 7 | 90480–12808 | TAPON<br>GROMMET | 1 | | | | | |
| 8 | 90387–06898 | ESPACIADOR<br>COLLAR | 1 | | | | | |
| 9 | 4S9–XF174–10–P0 | CUBIERTA LATERAL 4<br>COVER, SIDE 4 | 1 | | | | | UR PARA DRMK<br>UR FOR DRMK |
| | 4S9–XF174–10–P1 | CUBIERTA LATERAL 4<br>COVER, SIDE 4 | 1 | | | | | UR PARA SMX<br>UR FOR SMX |
| | 4S9–XF174–10–P3 | CUBIERTA LATERAL 4<br>COVER, SIDE 4 | 1 | | | | | UR SMX PARA DPBMC<br>UR SMX FOR DPBMC |
| 10 | 4S9–F173F–30 | .GRAFICO 2<br>.GRAPHIC, 2 | 1 | | | | | UR PARA DRMK<br>UR FOR DRMK |
| | 4S9–F173F–40 | .GRAFICO 2<br>.GRAPHIC, 2 | 1 | | | | | UR PARA SMX<br>UR FOR SMX |
| | 4S9–F173F–50 | .GRAFICO 2<br>.GRAPHIC, 2 | 1 | | | | | UR PARA DPBMC<br>UR FOR DPBMC |
| 11 | 99246–00100 | .EMBLEMA, YAMAHA<br>.EMBLEM, YAMAHA | 1 | | | | | |
| 12 | 97707–50025 | TORNILLO ROSCA HEMBRA<br>SCREW, TAPPING | 1 | | | | | |
| 13 | 90183–05807 | TUERCA DE RESORTE<br>NUT, SPRING | 1 | | | | | |
| 14 | 90480–12808 | TAPON<br>GROMMET | 1 | | | | | |
| 15 | 90387–06898 | ESPACIADOR<br>COLLAR | 1 | | | | | |
| 16 | 4S9–XF171–10–P0 | CUBIERTA LATERAL 5<br>COVER, SIDE 5 | 1 | | | | | UR PARA DRMK<br>UR FOR DRMK |
| | 4S9–XF171–00–P0 | CUBIERTA LATERAL 5<br>COVER, SIDE 5 | 1 | | | | | UR PARA SMX,DPBMC<br>UR FOR SMX,DPBMC |
| 17 | 4S9–F153E–00 | .EMBLEMA, YAMAHA<br>.EMBLEM, YAMAHA | 1 | | | | | |
| 18 | 90159–06817 | TORNILLO CON VALONA<br>SCREW, WITH WASHER | 2 | | | | | |

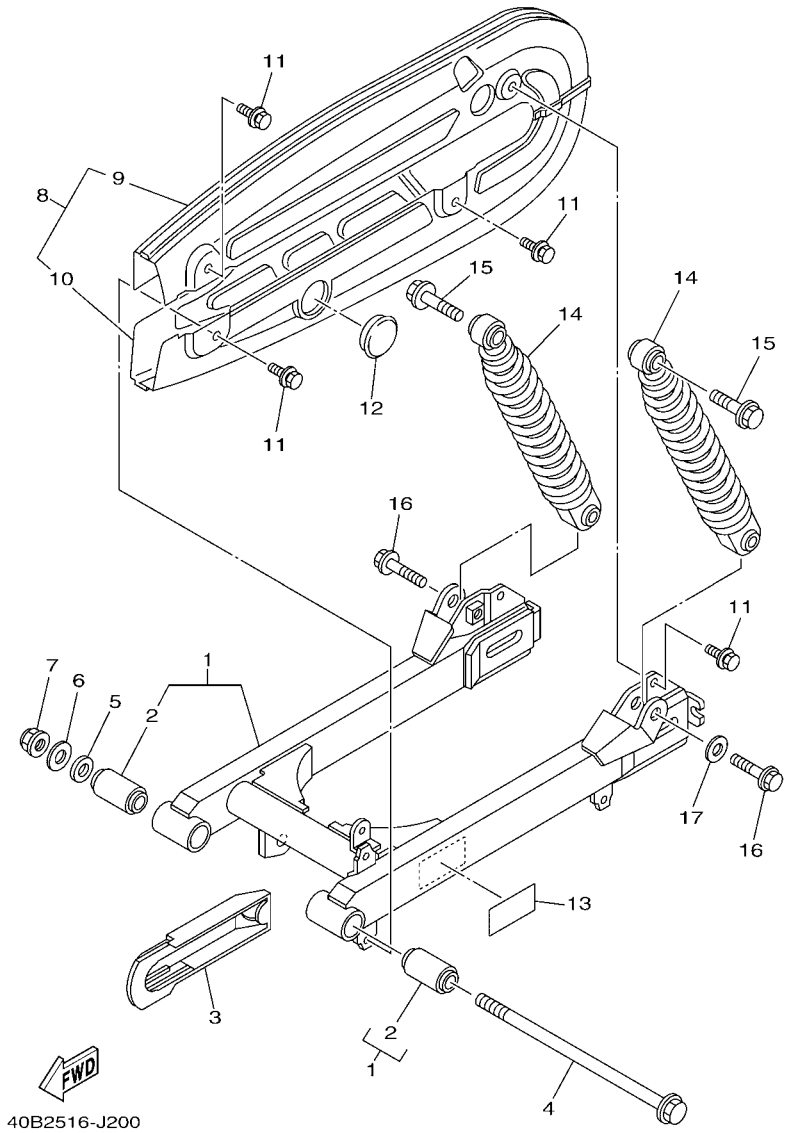


## FIG. 20 BRAZO TRASERO & SUSPENSION REAR ARM & SUSPENSION

| REF. Nº | CODIGO Nº PART NO. | DESCRIPCION DESCRIPTION | 40B3 | | | | | OBSERVACIONES REMARKS |
|---|---|---|---|---|---|---|---|---|
| 1 | 4S9–F2100–01–WN | BRAZO TRASERO COMPLETO<br>REAR ARM ASSY | 1 | | | | | CIS<br>CIS |
| 2 | 4S9–F2123–00 | .BUJE 1<br>.BUSH 1 | 2 | | | | | |
| 3 | 4S9–F2151–01 | SELLO DE GUARDA<br>SEAL, GUARD | 1 | | | | | |
| 4 | 4S9–F2141–00 | EJE DEL BARCULANTE<br>SHAFT, PIVOT | 1 | | | | | |
| 5 | 90201–128D0 | ARANDELA PLANA<br>WASHER, PLATE | 1 | | | | | |
| 6 | 90201–12190 | ARANDELA PLANA<br>WASHER, PLATE | 1 | | | | | |
| 7 | 95604–12200 | TUERCA DE AUTO-CIERRE<br>NUT, SELF-LOCKING | 1 | | | | | |
| 8 | 4S9–F2310–00 | CAJA DE CADENA COMPLETA<br>CHAIN CASE ASSY | 1 | | | | | |
| 9 | 4S9–F2311–00 | .CABRECADENA<br>.CASE, CHAIN | 1 | | | | | |
| 10 | 4S9–F2312–00 | .CAJA DE CADENA 2<br>.CASE, CHAIN 2 | 1 | | | | | |
| 11 | 97502–06510 | TORNILLO CON RONDONA<br>BOLT, WITH WASHER | 4 | | | | | |
| 12 | 4S9–F2315–00 | TAPA<br>CAP | 1 | | | | | |
| 13 | 40B–F1668–20 | ETIQUETA DE FRANJA<br>LABEL, TIRE | 1 | | | | | |
| 14 | 4S9–F2210–00 | AMORTIGUADOR TRASERO COMPLETO<br>SHOCK ABSORBER ASSY, REAR | 2 | | | | | |
| 15 | 90105–12802 | TORNILLO<br>BOLT, FLANGE | 2 | | | | | |
| 16 | 90105–10813 | TORNILLO<br>BOLT, FLANGE | 2 | | | | | |
| 17 | 90201–101J1 | ARANDELA PLANA<br>WASHER, PLATE | 1 | | | | | |

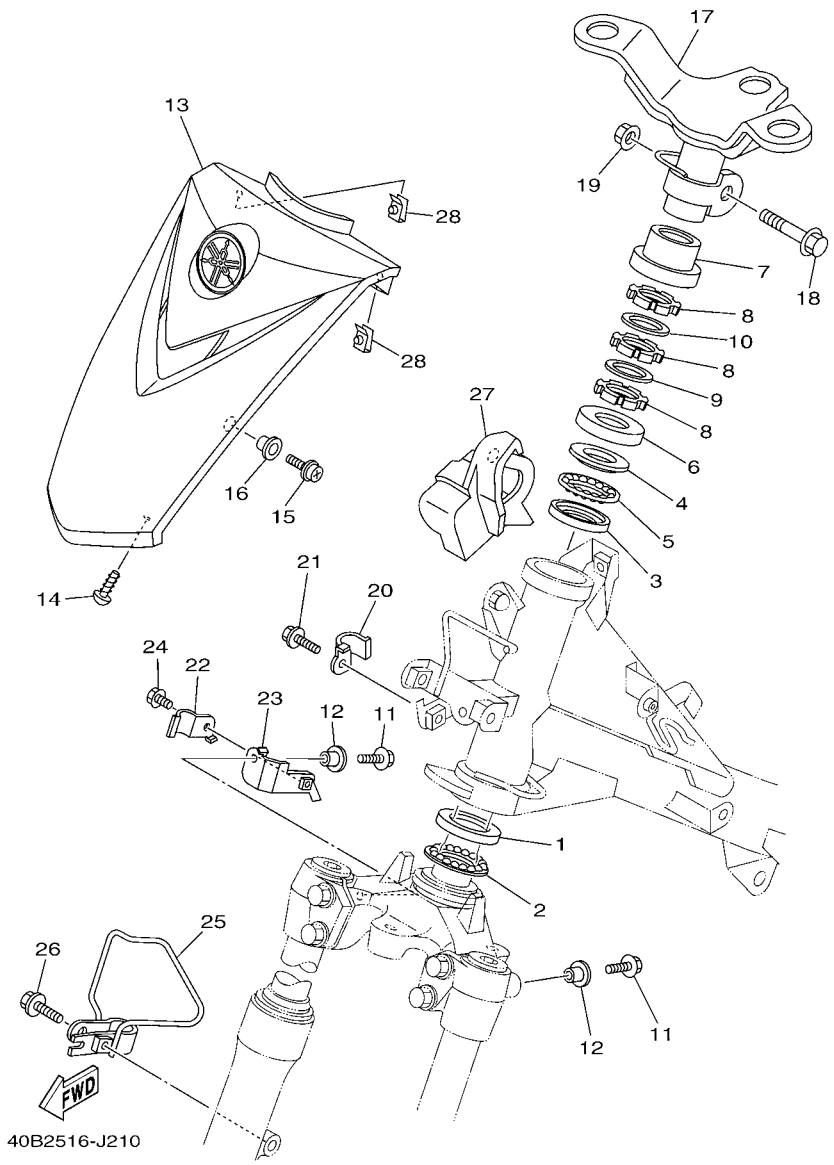


## FIG. 21 DIRECCION STEERING

| REF. Nº | CODIGO Nº PART NO. | DESCRIPCION DESCRIPTION | 40B3 | | | | | OBSERVACIONES REMARKS |
|---|---|---|---|---|---|---|---|---|
| 1 | 4KL–F3412–00 | PISTA DE BOLAS 2<br>RACE, BALL 2 | 1 | | | | | |
| 2 | 5WG–F341E–00 | RETEN DE COJINETE<br>RETAINER, BALL BEARING | 1 | | | | | |
| 3 | 5WB–F3412–00 | PISTA DE BOLAS 2<br>RACE, BALL 2 | 1 | | | | | |
| 4 | 5WB–F3411–00 | PISTA DE BOLAS 1<br>RACE, BALL 1 | 1 | | | | | |
| 5 | 5WG–F341E–10 | RETEN DE COJINETE<br>RETAINER, BALL BEARING | 1 | | | | | |
| 6 | 4S9–F3416–00 | CUBIERTA DE BASE DE BOLA 2<br>COVER, BALL RACE 2 | 1 | | | | | |
| 7 | 4S9–F3415–00 | CUBIERTA DE PISTA DE BOLAS 1<br>COVER, BALL RACE 1 | 1 | | | | | |
| 8 | 90179–25809 | TUERCA<br>NUT | 3 | | | | | |
| 9 | 90202–26803 | ARANDELA DE PLANA<br>WASHER, PLATE | 1 | | | | | |
| 10 | 4S9–F3418–00 | ARANDELA ESPECIAL<br>WASHER, SPECIAL | 1 | | | | | |
| 11 | 95027–06016 | PERNO, DE BRIDA<br>BOLT, FLANGE | 2 | | | | | |
| 12 | 90387–06681 | ESPACIADOR<br>COLLAR | 2 | | | | | |
| 13 | 40B–XF339–40–P0 | PANEL DELANTERO<br>PANEL, FRONT | 1 | | | | | UR SMX<br>UR SMX |
| | 40B–XF339–50–P1 | PANEL DELANTERO<br>PANEL, FRONT | 1 | | | | | UR BS4<br>UR BS4 |
| 14 | 97707–50012 | TORNILLO<br>SCREW, TRUSS HEAD TAPPING | 2 | | | | | |
| 15 | 90159–06817 | TORNILLO CON VALONA<br>SCREW, WITH WASHER | 2 | | | | | |
| 16 | 90387–062M9 | ESPACIADOR<br>COLLAR | 2 | | | | | |
| 17 | 4S9–F3461–00 | SOPORTE DE MANUBRIO<br>BRACKET, HANDLE | 1 | | | | | |
| 18 | 90105–10036 | TORNILLO<br>BOLT, FLANGE | 1 | | | | | |
| 19 | 95607–10200 | TUERCA DE AUTO-CIERRE<br>NUT, U FLANGE | 1 | | | | | |
| 20 | 4S9–F5887–00 | SOPORTE DE MANGUERA FRENO<br>HOLDER, BRAKE HOSE | 1 | | | | | |
| 21 | 95027–06010 | PERNO, DE BRIDA<br>BOLT, FLANGE | 1 | | | | | |
| 22 | 4S9–F5886–00 | SOPORTE DE MANGUERA FRENO<br>HOLDER, BRAKE HOSE | 1 | | | | | |
| 23 | 4S9–F5875–00 | SOPORTE DE MANGUERA FRENO 1<br>HOLDER, BRAKE HOSE 1 | 1 | | | | | |
| 24 | 95027–06010 | PERNO, DE BRIDA<br>BOLT, FLANGE | 1 | | | | | |
| 25 | 4S9–F331E–00 | GUIA DE CABLE<br>GUIDE, CABLE | 1 | | | | | |
| 26 | 95027–06025 | PERNO, DE BRIDA<br>BOLT, FLANGE | 1 | | | | | |

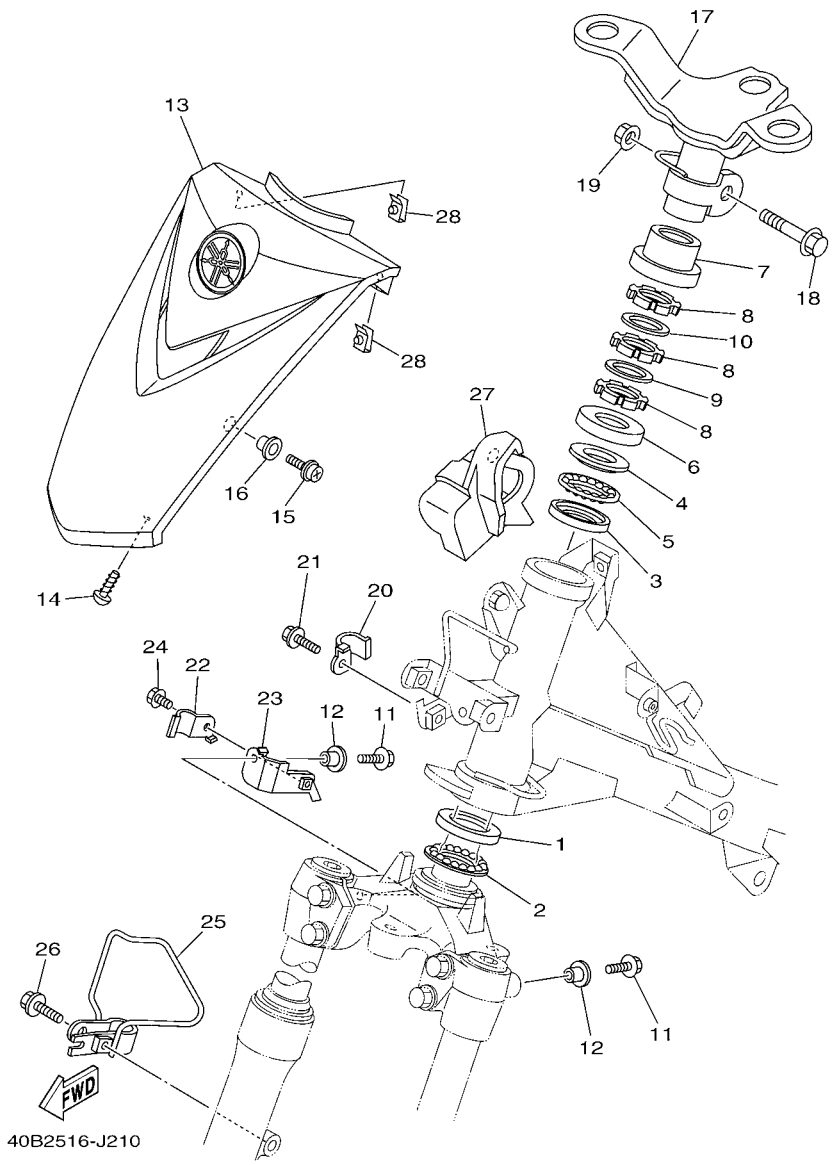


## FIG. 21 DIRECCION STEERING

| REF. Nº | CODIGO Nº PART NO. | DESCRIPCION DESCRIPTION | 40B3 | | | | | OBSERVACIONES REMARKS |
|---|---|---|---|---|---|---|---|---|
| 27 | 4S9–F3472–00 | PROTECTOR<br>PROTECTOR | 1 | | | | | |
| 28 | 90183–05807 | TUERCA DE RESORTE<br>NUT, SPRING | 2 | | | | | |

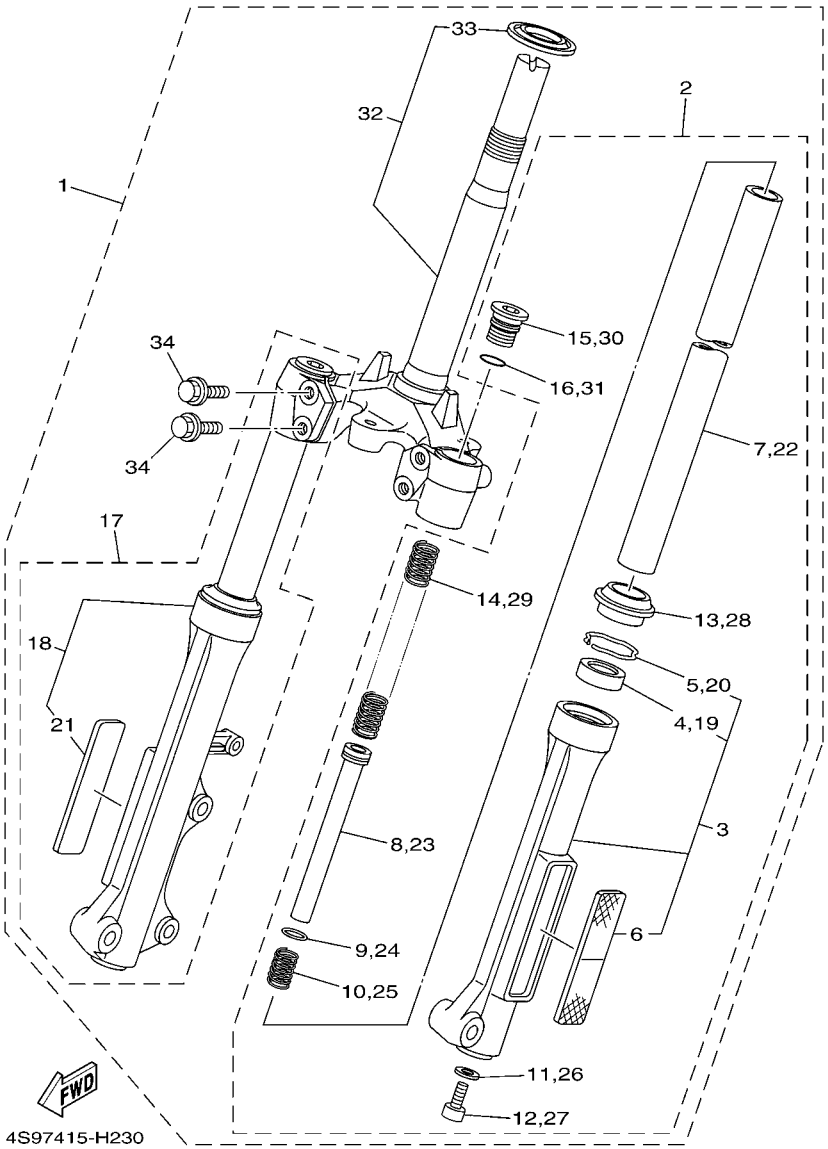


## FIG. 22 HORQUILLA DELANTERA FRONT FORK

| REF. Nº | CODIGO Nº PART NO. | DESCRIPCION DESCRIPTION | 40B3 | | | | | OBSERVACIONES REMARKS |
|---|---|---|---|---|---|---|---|---|
| 1 | 4S9–F3100–00 | HORQUILLA DELANTERA COMPLETA<br>FRONT FORK ASSY | 1 | | | | | |
| 2 | 4S9–F3102–00 | .HORQUILLA DELANTERA COMPL.(MI)<br>.FRONT FORK ASSY (L.H) | 1 | | | | | |
| 3 | 4S9–F3126–00 | ..TUBO EXTERIOR (IZQUIERDO)<br>..TUBE, OUTER (LEFT) | 1 | | | | | |
| 4 | 4RT–F3145–01 | ...RETEN DE ACEITE<br>...OIL SEAL | 1 | | | | | |
| 5 | 4RT–F3153–00 | ...ANILLO DE ENGANCHE<br>...RING, SNAP | 1 | | | | | |
| 6 | 4S9–H5110–00 | ...REFLECTOR COMPLETO<br>...REFLECTOR ASSY | 1 | | | | | |
| 7 | 4S9–F3110–00 | ..TUBO INTERIOR COMPLETO 1<br>..INNER TUBE COMP.1 | 1 | | | | | |
| 8 | 4S9–F3170–00 | ..CILINDRO COMPL DE HORQ DELANT<br>..CYLINDER COMP., FRONT FORK | 1 | | | | | |
| 9 | 4S9–F3157–00 | ..ANILLO DEL PISTON<br>..RING, PISTON | 1 | | | | | |
| 10 | 4S9–F3152–00 | ..RESORTE DE SUBENSAMBLE<br>..SPRING, SUB | 1 | | | | | |
| 11 | 4TU–F3479–00 | ..EMPAQUE<br>..GASKET | 1 | | | | | |
| 12 | 5LK–F3356–00 | ..PERNO 2<br>..BOLT 2 | 1 | | | | | |
| 13 | 4RT–F3144–10 | ..EMPAQUE<br>..GASKET | 1 | | | | | |
| 14 | 4S9–F3141–00 | ..RESORTE HORQUILLA DELANT.<br>..SPRING, FRONT FORK | 1 | | | | | |
| 15 | 4S9–F3111–00 | ..PERNO DE TAPA<br>..BOLT, CAP | 1 | | | | | |
| 16 | 2JG–F3147–00 | ..ARO<br>..O-RING | 1 | | | | | |
| 17 | 4S9–F3103–00 | .HORQUILLA DELANTERA COMPL.(MD)<br>.FRONT FORK ASSY (R.H) | 1 | | | | | |
| 18 | 4S9–F3136–00 | ..TUBO EXTERIOR (DERECHO)<br>..TUBE, OUTER (RIGHT) | 1 | | | | | |
| 19 | 4RT–F3145–01 | ...RETEN DE ACEITE<br>...OIL SEAL | 1 | | | | | |
| 20 | 4RT–F3153–00 | ...ANILLO DE ENGANCHE<br>...RING, SNAP | 1 | | | | | |
| 21 | 4S9–H5110–00 | ...REFLECTOR COMPLETO<br>...REFLECTOR ASSY | 1 | | | | | |
| 22 | 4S9–F3110–00 | ..TUBO INTERIOR COMPLETO 1<br>..INNER TUBE COMP.1 | 1 | | | | | |
| 23 | 4S9–F3170–00 | ..CILINDRO COMPL DE HORQ DELANT<br>..CYLINDER COMP., FRONT FORK | 1 | | | | | |
| 24 | 4S9–F3157–00 | ..ANILLO DEL PISTON<br>..RING, PISTON | 1 | | | | | |
| 25 | 4S9–F3152–00 | ..RESORTE DE SUBENSAMBLE<br>..SPRING, SUB | 1 | | | | | |
| 26 | 4TU–F3479–00 | ..EMPAQUE<br>..GASKET | 1 | | | | | |
| 27 | 5LK–F3356–00 | ..PERNO 2<br>..BOLT 2 | 1 | | | | | |

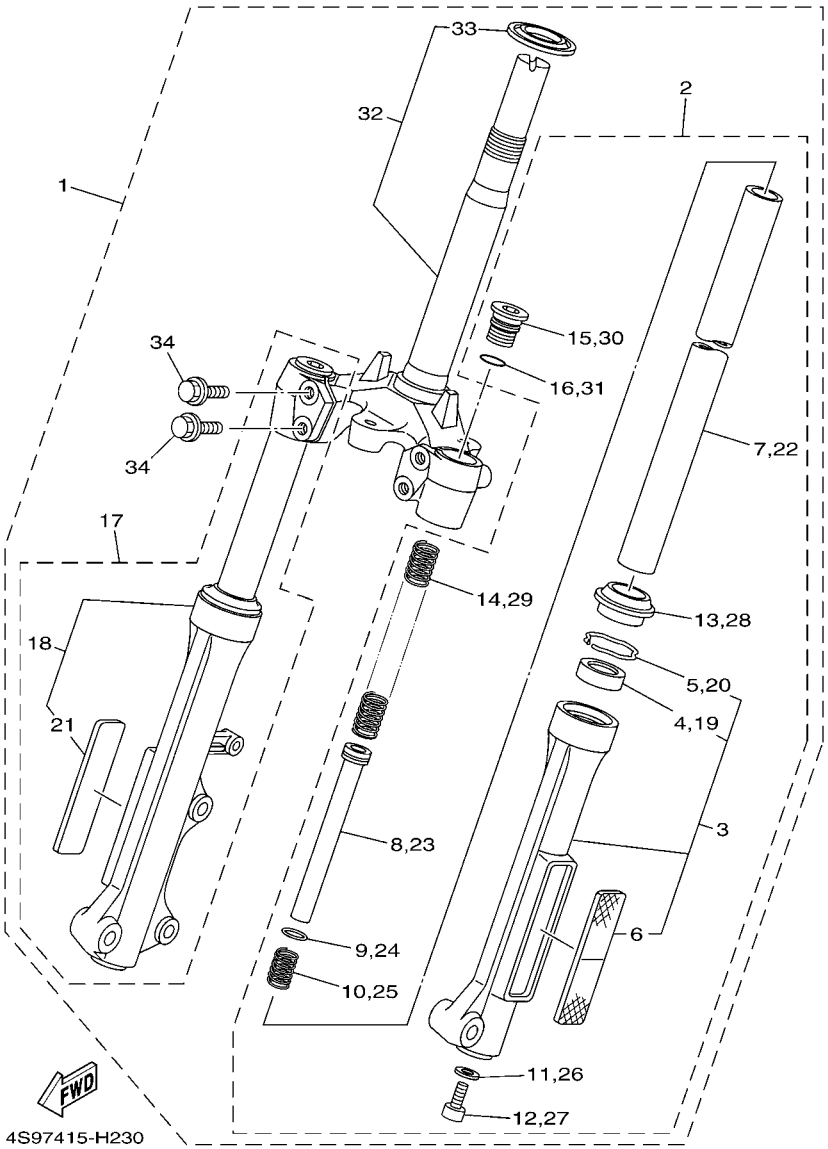


## FIG. 22 HORQUILLA DELANTERA FRONT FORK

| REF. Nº | CODIGO Nº PART NO. | DESCRIPCION DESCRIPTION | 40B3 | | | | | OBSERVACIONES REMARKS |
|---|---|---|---|---|---|---|---|---|
| 28 | 4RT–F3144–10 | ..EMPAQUE<br>..GASKET | 1 | | | | | |
| 29 | 4S9–F3141–00 | ..RESORTE HORQUILLA DELANT.<br>..SPRING, FRONT FORK | 1 | | | | | |
| 30 | 4S9–F3111–00 | ..PERNO DE TAPA<br>..BOLT, CAP | 1 | | | | | |
| 31 | 2JG–F3147–00 | ..ARO<br>..O-RING | 1 | | | | | |
| 32 | 4S9–F3340–00 | .PLATINA INFERIOR COMPLETA<br>.UNDER BRACKET COMP. | 1 | | | | | |
| 33 | 4TU–F3411–00 | ..PISTA DE BOLAS 1<br>..RACE, BALL 1 | 1 | | | | | |
| 34 | 4S9–F3346–00 | .PERNO 1<br>.BOLT 1 | 4 | | | | | |

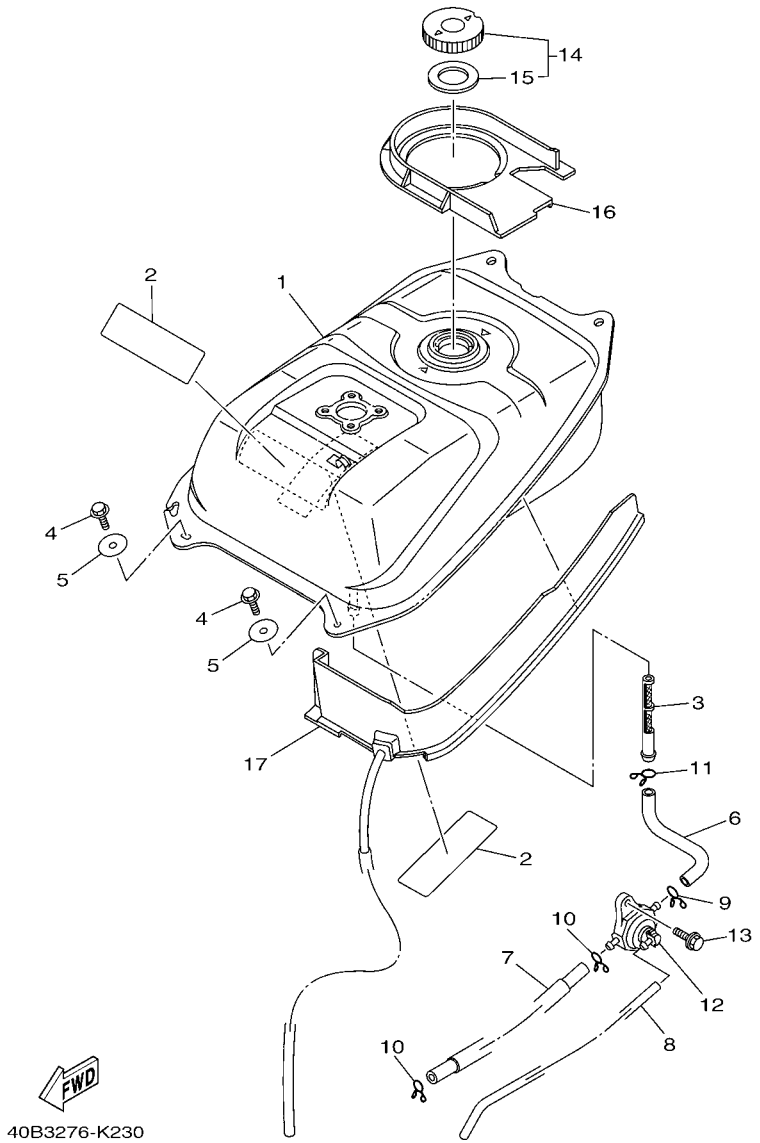


## FIG. 23 DEPOSITO DE COMBUSTIBLE FUEL TANK

| REF. Nº | CODIGO Nº PART NO. | DESCRIPCION DESCRIPTION | 40B3 | | | | | OBSERVACIONES REMARKS |
|---|---|---|---|---|---|---|---|---|
| 1 | 4S9–F4110–01 | DEPOSITO DE COMBUSTIBLE COMP.<br>FUEL TANK COMP. | 1 | | | | | |
| 2 | 4S9–F414G–10 | SELLO<br>SEAL | 2 | | | | | |
| 3 | 4S9–F4514–00 | RED DE FILTRO 1<br>NET, FILTER 1 | 1 | | | | | |
| 4 | 95827–06016 | TORNILLO<br>BOLT, FLANGE | 2 | | | | | |
| 5 | 90201–064K6 | ARANDELA PLANA<br>WASHER, PLATE | 2 | | | | | |
| 6 | 4S9–F4311–00 | TUBO DE COMBUSTIBLE 1<br>PIPE, FUEL 1 | 1 | | | | | |
| 7 | 4S9–F4312–00 | TUBO 2<br>PIPE 2 | 1 | | | | | |
| 8 | 4S9–F4313–00 | TUBO 3<br>PIPE 3 | 1 | | | | | |
| 9 | 90467–10803 | PRESILLA<br>CLIP | 1 | | | | | |
| 10 | 90467–09006 | PRESILLA<br>CLIP | 2 | | | | | |
| 11 | 90467–11801 | PRESILLA<br>CLIP | 1 | | | | | |
| 12 | 4S9–F4500–00 | GRIFO DE COMBUSTIBLE 1<br>FUEL COCK ASSY 1 | 1 | | | | | |
| 13 | 95807–06014 | TORNILLO<br>BOLT, FLANGE | 1 | | | | | |
| 14 | 4S9–F4610–00 | TAPA COMPLETA<br>CAP ASSY | 1 | | | | | |
| 15 | 4S9–F4612–00 | .EMPAQUE DE TAPA<br>.PACKING, CAP | 1 | | | | | |
| 16 | 4S9–F4141–00 | PROTECTOR DEPOSITO COMBUST.<br>PROTECTOR, FUEL TANK | 1 | | | | | |
| 17 | 4S9–F4188–01 | MOLDURA DEPOSITO COMBUST.<br>MOLD, FUEL TANK | 1 | | | | | |

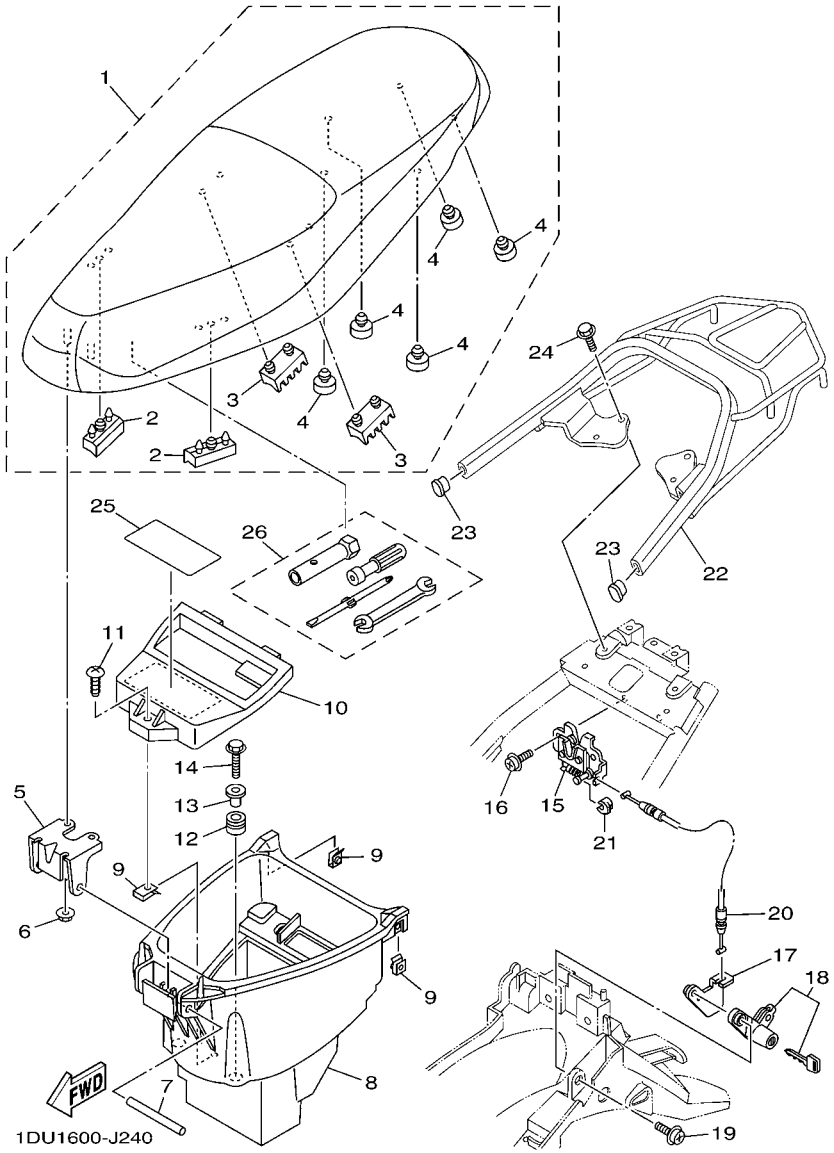


## FIG. 24 ASIENTO SEAT

| REF. Nº | CODIGO Nº PART NO. | DESCRIPCION DESCRIPTION | 40B3 | | | | | OBSERVACIONES REMARKS |
|---|---|---|---|---|---|---|---|---|
| 1 | 4S9–F4730–10 | SILLIN DOBLE COMPLETO<br>DOUBLE SEAT ASSY | 1 | | | | | |
| 2 | 4S9–F4747–00 | .AMORTIGUADOR DE ASIENTO<br>.DAMPER, SEAT | 2 | | | | | |
| 3 | 4S9–F4723–00 | .AMORTIGUADOR DE ASIENTO<br>.DAMPER, SEAT | 2 | | | | | |
| 4 | 4S9–F4741–00 | .COJIN DE ASIENTO<br>.PAD, SEAT | 5 | | | | | |
| 5 | 4S9–F4726–00 | HINGE SEAT<br>HINGE, SEAT | 1 | | | | | |
| 6 | 95707–06500 | TUERCA DE BRIDA<br>NUT, FLANGE | 2 | | | | | |
| 7 | 4S9–F4727–00 | PASADOR ACCESORIO DE ASIENTO<br>PIN, SEAT FITTING | 1 | | | | | |
| 8 | 4S9–F473R–00 | CAJA 1<br>BOX 1 | 1 | | | | | |
| 9 | 90183–05807 | TUERCA DE RESORTE<br>NUT, SPRING | 3 | | | | | |
| 10 | 4S9–F473T–00 | TAPA 1<br>LID 1 | 1 | | | | | |
| 11 | 97707–50016 | TORNILLO<br>SCREW, TRUSS HEAD TAPPING | 1 | | | | | |
| 12 | 90480–14806 | TAPON<br>GROMMET | 4 | | | | | |
| 13 | 90387–067W9 | ESPACIADOR<br>COLLAR | 4 | | | | | |
| 14 | 95027–06025 | PERNO, DE BRIDA<br>BOLT, FLANGE | 4 | | | | | |
| 15 | 4S9–F4780–00 | CERRADURA SILLIN COMPLETO<br>SEAT LOCK ASSY | 1 | | | | | |
| 16 | 98507–06012 | TORNILLO DE CABEZA PLANA<br>SCREW, PAN HEAD | 2 | | | | | |
| 17 | 4S9–F117K–00 | SOPORTE DE CERRADURA<br>STAY, LOCK | 1 | | | | | |
| 18 | 4S9–WF470–00 | JUEGO DE ROTOR<br>ROTOR SET | 1 | | | | | |
| 19 | 90159–06033 | TORNILLO CON VALONA<br>SCREW, WITH WASHER | 1 | | | | | |
| 20 | 4S9–F478E–00 | CABLE<br>CABLE, SEAT LOCK | 1 | | | | | |
| 21 | 4S9–F4768–00 | TOPE<br>STOPPER | 1 | | | | | |
| 22 | 4S9–F4773–01 | MANIJA DE ASIENTO<br>HANDLE, SEAT | 1 | | | | | |
| 23 | 4S9–F4742–00 | ANILLO PROTECTOR<br>GROMMET | 2 | | | | | |
| 24 | 95807–06020 | TORNILLO<br>BOLT, FLANGE | 4 | | | | | |
| 25 | 40B–F4875–10 | ETIQUETA 1<br>LABEL 1 | 1 | | | | | |
| 26 | 4S9–F8100–00 | JUEGO DE HERRAMIENTAS<br>TOOL KIT | 1 | | | | | |

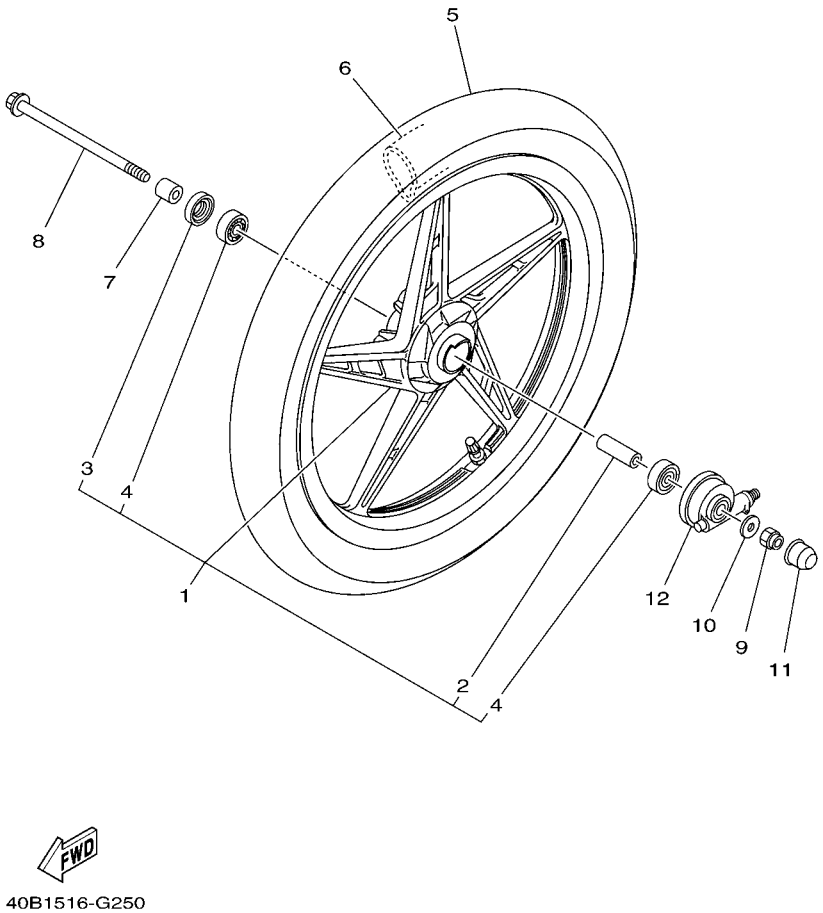


## FIG. 25 RUEDA DELANTERA FRONT WHEEL

| REF. Nº | CODIGO Nº PART NO. | DESCRIPCION DESCRIPTION | 40B3 | | | | | OBSERVACIONES REMARKS |
|---|---|---|---|---|---|---|---|---|
| 1 | 4S9–F5160–00–33 | RUEDA FUNDIDA DELANTERA<br>CAST WHEEL, FRONT | 1 | | | | | YB<br>YB |
| 2 | 90560–10292 | .SEPARADOR<br>.SPACER | 1 | | | | | |
| 3 | 93106–20808 | .SELLO ACEITE<br>.OIL SEAL | 1 | | | | | |
| 4 | 93306–300Y4 | .COJINETE<br>.BEARING | 2 | | | | | |
| 5 | 94107–17842 | NEUMATICO (70/90-17 M/C 38H)<br>TIRE (70/90-17 M/C 38H HF314A) | 1 | | | | | DURO<br>DURO |
| 6 | 94207–17808 | TUBO (2.50/2.75, 70-80/90-17)<br>TUBE (2.50/2.75, 70-80/90-17) | 1 | | | | | DURO<br>DURO |
| 7 | 90387–10277 | ESPACIADOR<br>COLLAR | 1 | | | | | |
| 8 | 4S9–F5181–00 | EJE DE LA RUEDA<br>AXLE, WHEEL | 1 | | | | | |
| 9 | 90185–10807 | TUERCA AUTOBLOCANTE<br>NUT, SELF-LOCKING | 1 | | | | | |
| 10 | 90201–101J1 | ARANDELA PLANA<br>WASHER, PLATE | 1 | | | | | |
| 11 | 40B–F5188–00 | TAPA<br>CAP | 1 | | | | | |
| 12 | 4S9–F5190–01 | UNIDAD DE ENGRANAJE COMPLETA<br>GEAR UNIT ASSY | 1 | | | | | |

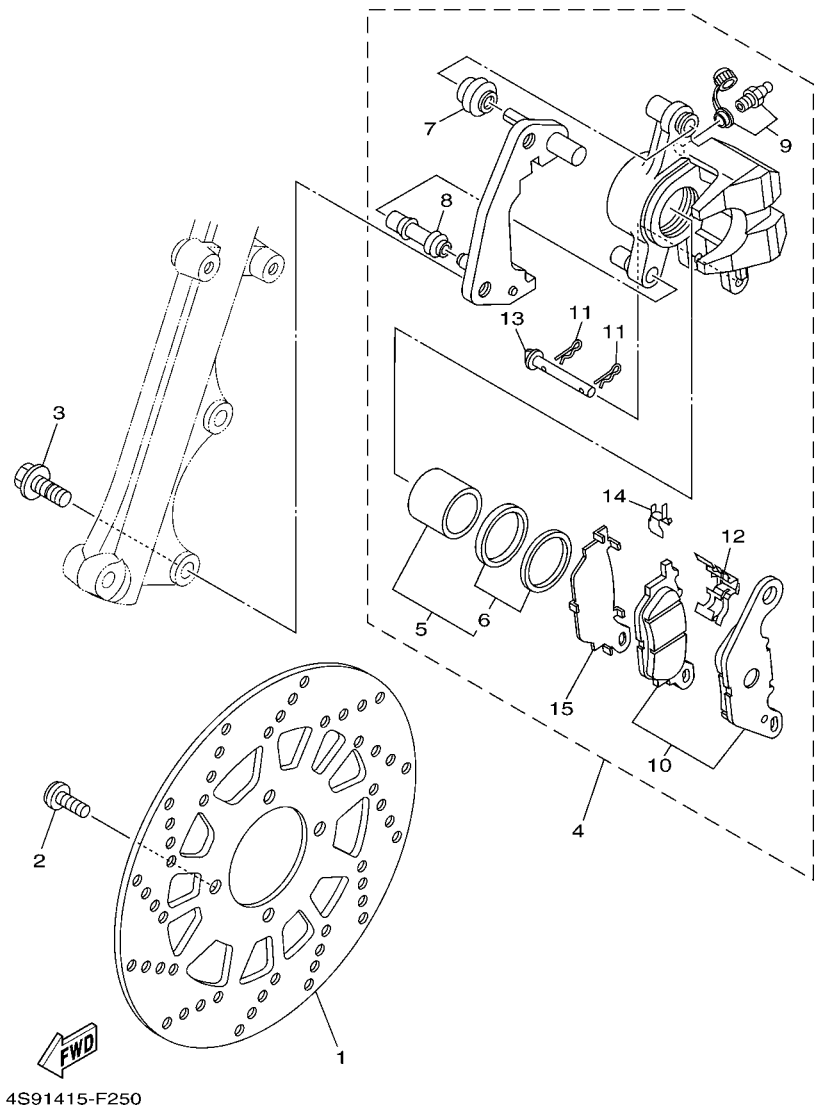


## FIG. 26 CALIBRE FRENO DELANTERA FRONT BRAKE CALIPER

| REF. Nº | CODIGO Nº PART NO. | DESCRIPCION DESCRIPTION | 40B3 | | | | | OBSERVACIONES REMARKS |
|---|---|---|---|---|---|---|---|---|
| 1 | 40B–F582U–00 | DISCO DE FRENO (DERECHO)<br>DISK, BRAKE (RIGHT) | 1 | | | | | |
| 2 | 90111–08807 | TORNILLO<br>BOLT,HEX. SOCKET BUTTON | 4 | | | | | |
| 3 | 90105–10824 | TORNILLO<br>BOLT, FLANGE | 2 | | | | | |
| 4 | 4S9–F580U–00 | CALIBRE COMPLETO (DERECHO)<br>CALIPER ASSY (RIGHT) | 1 | | | | | |
| 5 | 4S5–W0057–00 | .PISTON COMPLETO PINZA<br>.PISTON ASSY, CALIPER | 1 | | | | | |
| 6 | 4S5–W0047–00 | ..JUEGO DE RETENES DE PINZA<br>..CALIPER SEAL KIT | 1 | | | | | |
| 7 | 4S5–F5917–00 | .FUNDA DE CALIBRE<br>.BOOT, CALIPER | 1 | | | | | |
| 8 | 4S5–F5937–00 | .FUNDA<br>.BOOT 2 | 1 | | | | | |
| 9 | 4S5–W0048–00 | .CJTO TORNILLO DE PURGA<br>.BLEED SCREW KIT | 1 | | | | | |
| 10 | 4S5–W0045–00 | .JUEGO DE COJIN DE FRENO<br>.BRAKE PAD KIT | 1 | | | | | |
| 11 | 4S5–F5925–00 | .PRESILLA<br>.CLIP | 2 | | | | | |
| 12 | 4S5–F5919–00 | .SOPORTE DE PASTILLAS<br>.SUPPORT, PAD | 1 | | | | | |
| 13 | 4S5–F5924–00 | .PASADOR<br>.PIN, PAD | 1 | | | | | |
| 14 | 4S5–F5939–00 | .PRESILLA<br>.CLIP, PAD | 1 | | | | | |
| 15 | 4S9–F5827–00 | .CUNA DE CALIBRE<br>.SHIM, CALIPER | 1 | | | | | |

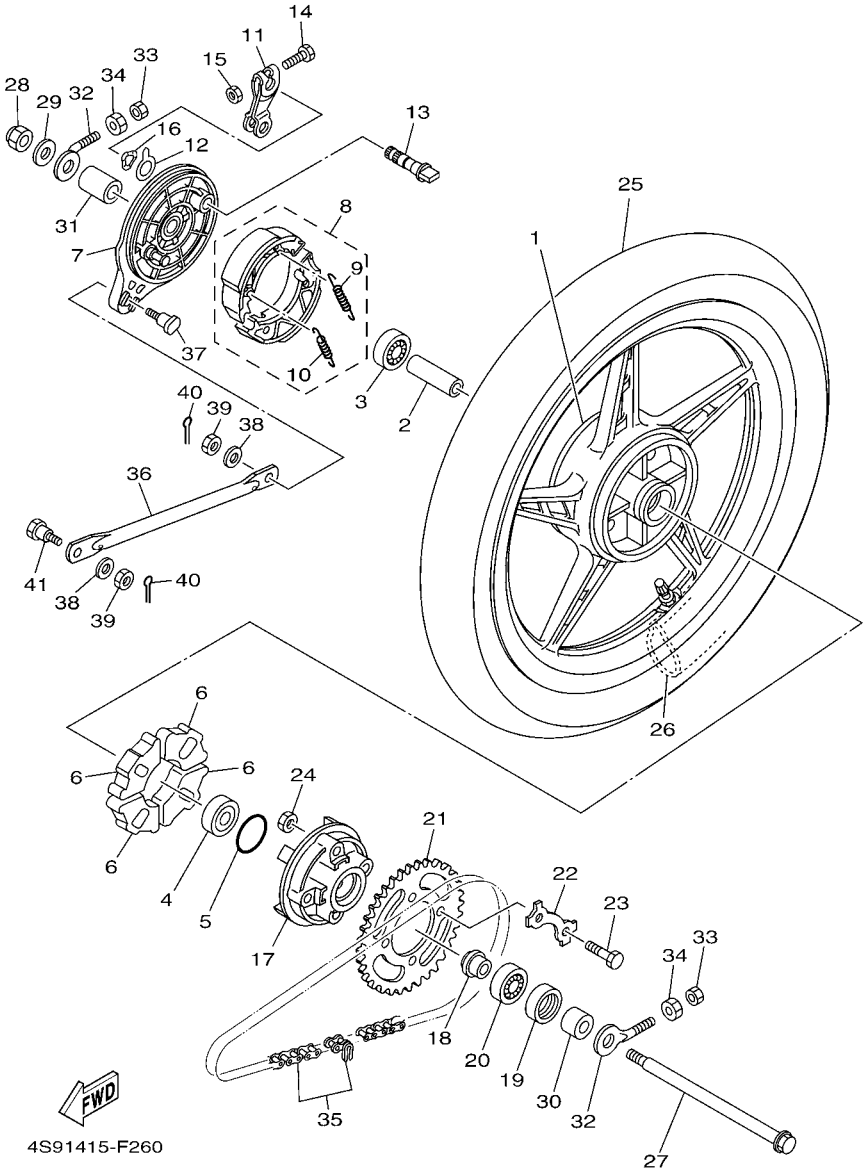


## FIG. 27 RUEDA TRASERA REAR WHEEL

| REF. Nº | CODIGO Nº PART NO. | DESCRIPCION DESCRIPTION | 40B3 | | | | | OBSERVACIONES REMARKS |
|---|---|---|---|---|---|---|---|---|
| 1 | 4S9–F5338–00–33 | RUEDA FUNDIDA TRASERA<br>CAST WHEEL, REAR | 1 | | | | | YB<br>YB |
| 2 | 90387–12844 | ESPACIADOR<br>COLLAR | 1 | | | | | |
| 3 | 93306–301XG | COJINETE<br>BEARING | 1 | | | | | |
| 4 | 93306–301XH | COJINETE<br>BEARING | 1 | | | | | |
| 5 | 93210–41041 | ANILLO O<br>O-RING | 1 | | | | | |
| 6 | 4S9–F5364–00 | AMORTIGUADOR<br>DAMPER | 4 | | | | | |
| 7 | 4S9–F5321–00–33 | PLACA DE ZAPATA DE FRENO<br>PLATE, BRAKE SHOE | 1 | | | | | YB<br>YB |
| 8 | 4S9–WF530–00 | JUEGO DE ZAPATA DE FRENO<br>BRAKE SHOE SET | 1 | | | | | |
| 9 | 90506–12801 | .RESORTE DE TENSION<br>.SPRING, TENSION | 1 | | | | | |
| 10 | 90506–15802 | .RESORTE DE TENSION<br>.SPRING, TENSION | 1 | | | | | |
| 11 | 4S9–F5355–00 | PALANCA DE ARBOL DE LEVAS<br>LEVER, CAMSHAFT | 1 | | | | | |
| 12 | 4S9–F533A–00 | PLACA INDICADOR<br>PLATE, INDICATOR | 1 | | | | | |
| 13 | 4S9–F5351–00 | ARBOL DE LEVAS<br>CAMSHAFT | 1 | | | | | |
| 14 | 90101–06278 | TORNILLO<br>BOLT | 1 | | | | | |
| 15 | 95307–06600 | TUERCA<br>NUT | 1 | | | | | |
| 16 | 90206–14093 | ARANDELA ONDULADA<br>WASHER, WAVE | 1 | | | | | |
| 17 | 4S9–F5366–00–33 | EMBRAGUE DE MASA<br>CLUTCH, HUB | 1 | | | | | YB<br>YB |
| 18 | 93106–26823 | SELLO ACEITE<br>OIL SEAL | 1 | | | | | |
| 19 | 90387–127Y0 | ESPACIADOR<br>COLLAR | 1 | | | | | |
| 20 | 93306–054Y0 | COJINETE<br>BEARING | 1 | | | | | |
| 21 | 4S9–F5435–20 | CORONA (35T)<br>SPROCKET, DRIVEN (35T) | 1 | | | | | |
| 22 | 4S9–F5412–00 | ARANDELA<br>WASHER | 2 | | | | | |
| 23 | 90101–08847 | TORNILLO<br>BOLT | 4 | | | | | |
| 24 | 90179–08639 | TUERCA<br>NUT | 4 | | | | | |
| 25 | 94108–17841 | NEUMATICO (80/90-17 M/C 50P)<br>TIRE (80/90-17 M/C 50P HF314A) | 1 | | | | | DURO<br>DURO |
| 26 | 94207–17808 | TUBO (2.50/2.75, 70-80/90-17)<br>TUBE (2.50/2.75, 70-80/90-17) | 1 | | | | | DURO<br>DURO |
| 27 | 4S9–F5381–00 | EJE DE RUEDA<br>AXLE, WHEEL | 1 | | | | | |

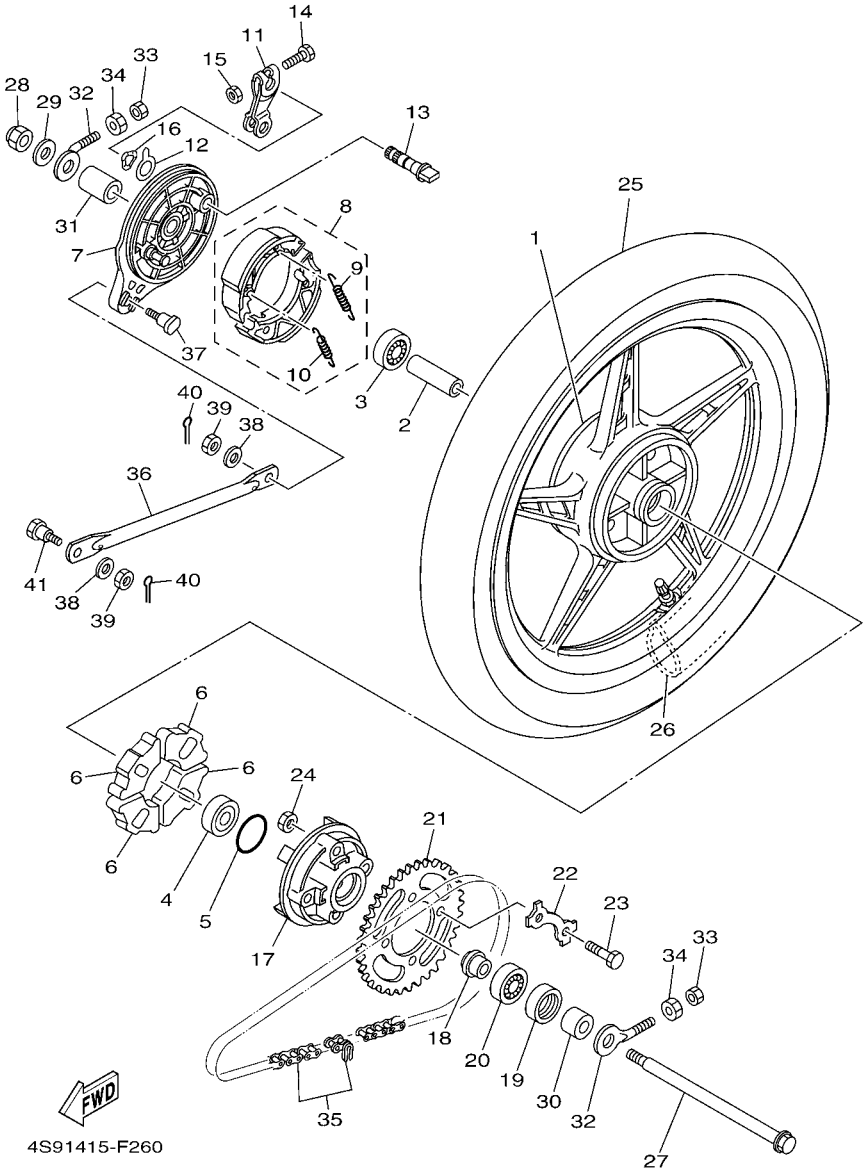


## FIG. 27 RUEDA TRASERA REAR WHEEL

| REF. Nº | CODIGO Nº PART NO. | DESCRIPCION DESCRIPTION | 40B3 | | | | | OBSERVACIONES REMARKS |
|---|---|---|---|---|---|---|---|---|
| 28 | 90185–12804 | TUERCA AUTOBLOCANTE<br>NUT, SELF-LOCKING | 1 | | | | | |
| 29 | 90201–12826 | ARANDELA PLANA<br>WASHER, PLATE | 1 | | | | | |
| 30 | 4S9–F5383–00 | COLLAR DE RUEDA<br>COLLAR, WHEEL | 1 | | | | | |
| 31 | 90387–12841 | ESPACIADOR<br>COLLAR | 1 | | | | | |
| 32 | 4S9–F5389–00 | TIRADOR DE CADENA 2<br>PULLER, CHAIN 2 | 2 | | | | | |
| 33 | 95307–06600 | TUERCA<br>NUT | 2 | | | | | |
| 34 | 90170–06184 | TUERCA<br>NUT | 2 | | | | | |
| 35 | 94568–B7098 | CADENA<br>CHAIN | 1 | | | | | |
| 36 | 4S9–F5371–00 | BARRA TENSORA<br>BAR, TENSION | 1 | | | | | |
| 37 | 90109–08183 | PERNO<br>BOLT | 1 | | | | | |
| 38 | 92907–08200 | ARANDELA<br>WASHER | 2 | | | | | |
| 39 | 95304–08700 | TUERCA<br>NUT | 2 | | | | | |
| 40 | 91401–20012 | CHAVETA<br>PIN, COTTER | 2 | | | | | |
| 41 | 90109–08368 | PERNO<br>BOLT | 1 | | | | | |

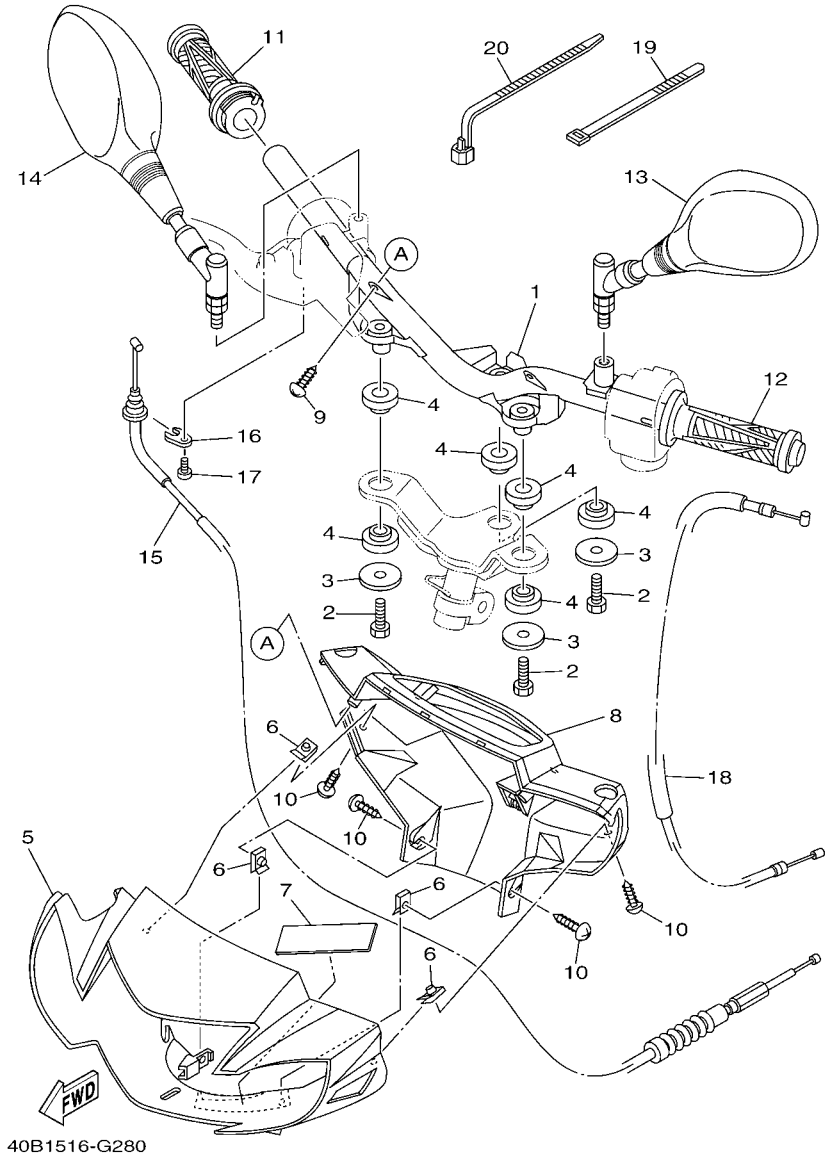


## FIG. 28 MANILLAR & CABLE — STEERING HANDLE & CABLE

| REF. Nº | CODIGO Nº PART NO. | DESCRIPCION DESCRIPTION | 40B3 | | | | | OBSERVACIONES REMARKS |
|---|---|---|---|---|---|---|---|---|
| 1 | 4S9–F6210–00 | MANUBRIO<br>HANDLE | 1 | | | | | |
| 2 | 97007–08016 | PERNO<br>BOLT | 3 | | | | | |
| 3 | 90201–08612 | ARANDELA PLANA<br>WASHER, PLATE | 3 | | | | | |
| 4 | 4S9–F6113–00 | AMORTIGUADOR<br>DAMPER | 6 | | | | | |
| 5 | 4S9–F6143–01–P0 | CUBIERTA DE MANUBRIO SUPERIOR1<br>COVER,HAND,UPPER 1 | 1 | | | | | UR PARA DRMK<br>UR FOR DRMK |
| | 4S9–F6143–01–P2 | CUBIERTA DE MANUBRIO SUPERIOR1<br>COVER,HAND,UPPER 1 | 1 | | | | | UR PARA SMX<br>UR FOR SMX |
| | 4S9–F6143–01–P3 | CUBIERTA DE MANUBRIO SUPERIOR1<br>COVER,HAND,UPPER 1 | 1 | | | | | UR PARA DPBMC<br>UR FOR DPBMC |
| 6 | 90183–05807 | TUERCA DE RESORTE<br>NUT, SPRING | 4 | | | | | |
| 7 | 4S9–F6113–20 | AMORTIGUADOR<br>DAMPER | 1 | | | | | |
| 8 | 4S9–F6145–00 | CUBIERTA DE MANUBRIO SUPERIOR2<br>COVER,HAND,UPPER 2 | 1 | | | | | |
| 9 | 97707–50016 | TORNILLO<br>SCREW, TRUSS HEAD TAPPING | 2 | | | | | |
| 10 | 97707–50012 | TORNILLO<br>SCREW, TRUSS HEAD TAPPING | 4 | | | | | |
| 11 | 4S9–F6240–00 | EMPUNADURA COMPLETA<br>GRIP ASSY | 1 | | | | | |
| 12 | 4S9–F6241–00 | EMPUNADURA<br>GRIP | 1 | | | | | |
| 13 | 40B–F6280–00 | ESPEJO COMPLETO (IZQUIERDO)<br>REAR VIEW MIRROR ASSY (LEFT) | 1 | | | | | |
| 14 | 40B–F6290–00 | ESPEJO COMPLETO (DERECHO)<br>REAR VIEW MIRROR ASSY (RIGHT) | 1 | | | | | |
| 15 | 4S9–F6311–00 | CABLE DE ACELERADOR 1<br>CABLE, THROTTLE 1 | 1 | | | | | |
| 16 | 4S9–F6393–00 | SOPORTE<br>HOLDER | 1 | | | | | |
| 17 | 98507–05012 | TORNILLO DE CABEZA PLANA<br>SCREW, PAN HEAD | 1 | | | | | |
| 18 | 4S9–F6331–00 | CABLE DE ARRANQUE<br>CABLE, STARTER 1 | 1 | | | | | |
| 19 | 4S9–H3936–00 | BANDA DE CABLE DE INTERRUPTOR<br>BAND, SWITCH CORD | 2 | | | | | |
| 20 | 90464–45800 | BRIDA<br>CLAMP | 1 | | | | | |

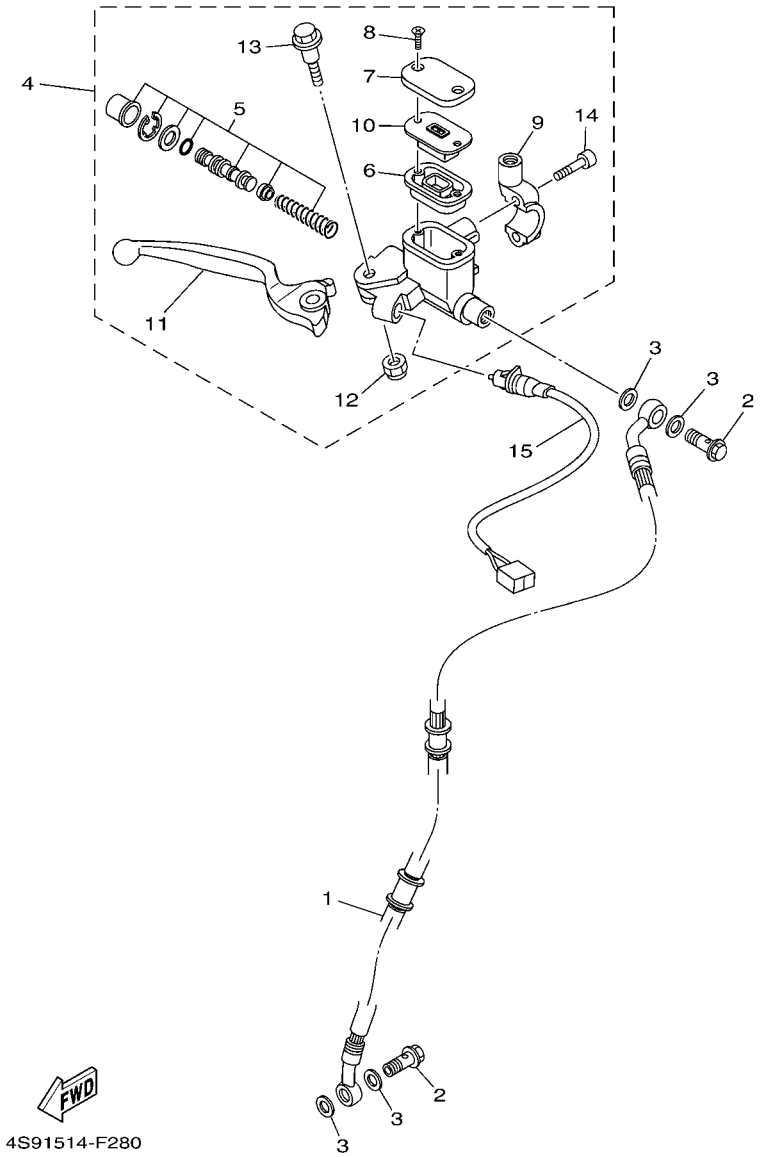


## FIG. 29 CILINDRO MAESTRO DELANTERO FRONT MASTER CYLINDER

| REF. Nº | CODIGO Nº PART NO. | DESCRIPCION DESCRIPTION | 40B3 | | | | | OBSERVACIONES REMARKS |
|---|---|---|---|---|---|---|---|---|
| 1 | 4S9–F5872–00 | MANGUERA DE FRENO 1<br>HOSE, BRAKE 1 | 1 | | | | | |
| 2 | 90401–10812 | PERNO DE UNION<br>BOLT, UNION | 2 | | | | | |
| 3 | 90201–108J9 | ARANDELA PLANA<br>WASHER, PLATE | 4 | | | | | |
| 4 | 4S9–F583T–00 | CILINDRO MAESTRO COMPLETO<br>MASTER CYLINDER ASSY | 1 | | | | | |
| 5 | 4S9–W0041–00 | .JUEGO DE CILINDRO MAESTRO<br>.CYLINDER KIT, MASTER | 1 | | | | | |
| 6 | 4S9–F5854–00 | .EMPAQUE,DIAFRAGMA<br>.DIAPHRAGM, RESERVOIR | 1 | | | | | |
| 7 | 4S9–F5852–00 | .TAPA DE TANQUE DE RESERVA<br>.CAP, RESERVOIR | 1 | | | | | |
| 8 | 4KL–F589H–00 | .TORNILLO<br>.SCREW | 2 | | | | | |
| 9 | 4S9–F5867–00 | .SOPORTE DE CILINDRO MAESTRO<br>.BRACKET, MASTER CYLINDER | 1 | | | | | |
| 10 | 4S9–F5855–00 | .BUJE DE DIAFRAGMA<br>.BUSH,DIAPHRAGM | 1 | | | | | |
| 11 | 4S9–H3922–00 | .PALANCA 2<br>.LEVER 2 | 1 | | | | | |
| 12 | 3D9–F586F–00 | .TUERCA AUTOBLOCANTE<br>.NUT, U | 1 | | | | | |
| 13 | 3D9–F589F–00 | .PERNO DE PALANCA<br>.BOLT, LEVER | 1 | | | | | |
| 14 | 91317–06025 | .PERNO<br>.BOLT | 2 | | | | | |
| 15 | 4S9–H3980–01 | INTERRUP. DE PARADA DELANTERO<br>FRONT STOP SWITCH ASSY | 1 | | | | | |

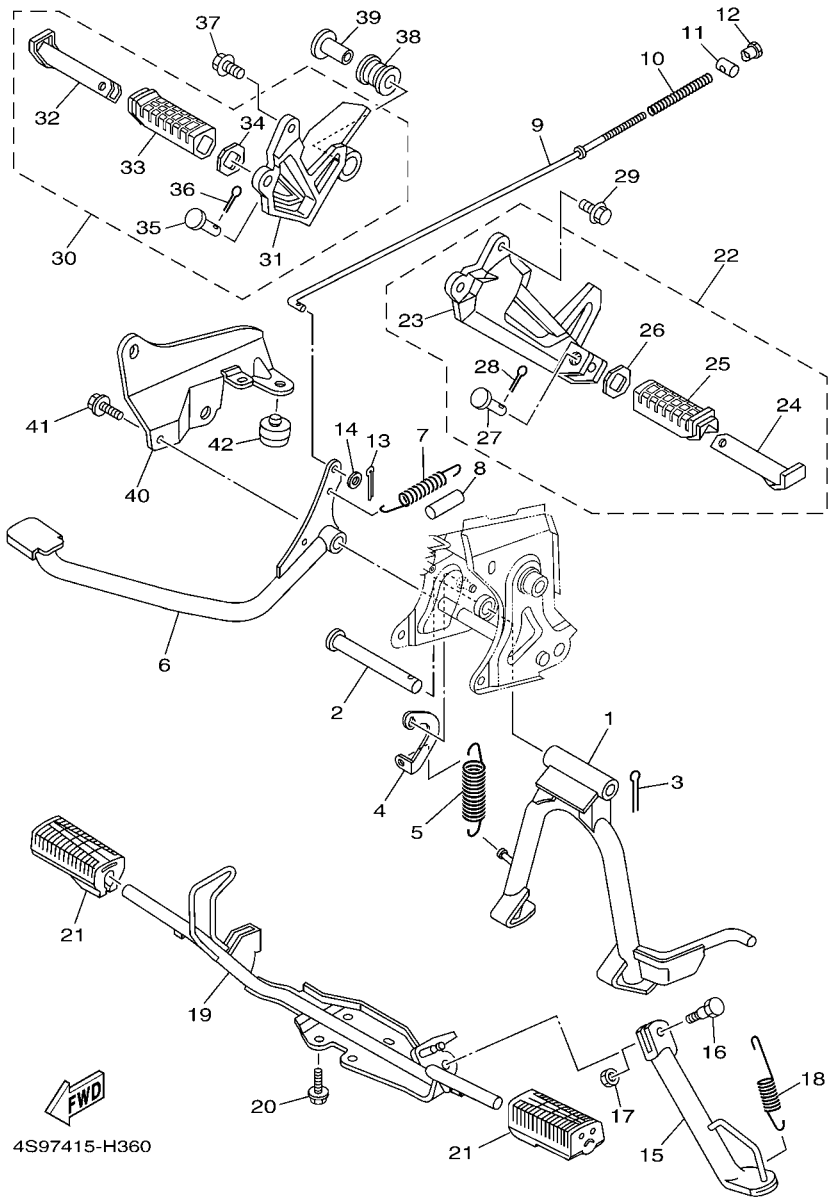


## FIG. 30 SOPORTE & APOYAPIE — STAND & FOOTREST

| REF. Nº | CODIGO Nº PART NO. | DESCRIPCION DESCRIPTION | 40B3 | | | | | OBSERVACIONES REMARKS |
|---|---|---|---|---|---|---|---|---|
| 1 | 4S9–F7111–01 | PUNTAL PRINCIPAL<br>STAND, MAIN | 1 | | | | | |
| 2 | 4S9–F7112–00 | EJE DE PUNTAL PRINCIPAL<br>SHAFT, MAIN STAND | 1 | | | | | |
| 3 | 91401–30030 | CHAVETA<br>PIN, COTTER | 1 | | | | | |
| 4 | 4S9–F7115–00 | CONEXION DE PUNTAL PRINCIPAL<br>LINK, MAIN STAND | 1 | | | | | |
| 5 | 90506–35815 | RESORTE DE TENSION<br>SPRING, TENSION | 1 | | | | | |
| 6 | 4S9–F7211–00 | PEDAL DE FRENO<br>PEDAL, BRAKE | 1 | | | | | |
| 7 | 90506–20810 | RESORTE DE TENSION<br>SPRING, TENSION | 1 | | | | | |
| 8 | 4S9–F7235–00 | CUBIERTA DE POLVO<br>COVER, DUST | 1 | | | | | |
| 9 | 4S9–F7231–00 | VARILLA DE FRENO<br>ROD, BRAKE | 1 | | | | | |
| 10 | 90501–10245 | RESORTE DE COMPRESION<br>SPRING, COMPRESSION | 1 | | | | | |
| 11 | 90249–12008 | PASADOR<br>PIN | 1 | | | | | |
| 12 | 90179–06411 | TUERCA<br>NUT | 1 | | | | | |
| 13 | 91401–20012 | CHAVETA<br>PIN, COTTER | 1 | | | | | |
| 14 | 92907–06600 | ARANDELA<br>WASHER, PLATE | 1 | | | | | |
| 15 | 4S9–F7311–00 | PUNTAL LATERAL<br>STAND, SIDE | 1 | | | | | |
| 16 | 90109–08830 | PERNO<br>BOLT | 1 | | | | | |
| 17 | 90185–08818 | TUERCA AUTOBLOCANTE<br>NUT, SELF-LOCKING | 1 | | | | | |
| 18 | 90506–20829 | RESORTE DE TENSION<br>SPRING, TENSION | 1 | | | | | |
| 19 | 4S9–F7411–00 | APOYAPIE 1<br>FOOTREST 1 | 1 | | | | | |
| 20 | 95827–08016 | TORNILLO<br>BOLT, FLANGE | 4 | | | | | |
| 21 | 4S9–F7413–00 | CUBIERTA DE APOYAPIE<br>COVER, FOOTREST | 2 | | | | | |
| 22 | 4S9–F7430–00 | APOYAPIE POSTERIOR COMPLETO 1<br>REAR FOOTREST ASSY 1 | 1 | | | | | |
| 23 | 4S9–F7452–00–WN | .SOPORTE, DE APOYAPIE 1<br>.BRACKET, FOOTREST 1 | 1 | | | | | CIS<br>CIS |
| 24 | 4S9–F7431–00 | .APOYAPIE POSTERIOR 1<br>.FOOTREST, REAR 1 | 1 | | | | | |
| 25 | 4S9–F7433–00 | .CUBIERTA APOYAPIE TRASERO<br>.COVER, REAR FOOTREST | 1 | | | | | |
| 26 | 4S9–F7445–00 | .PLACE 1<br>.PLATE 1 | 1 | | | | | |
| 27 | 90240–08140 | .PASADOR CON HOYO<br>.PIN, CLEVIS | 1 | | | | | |

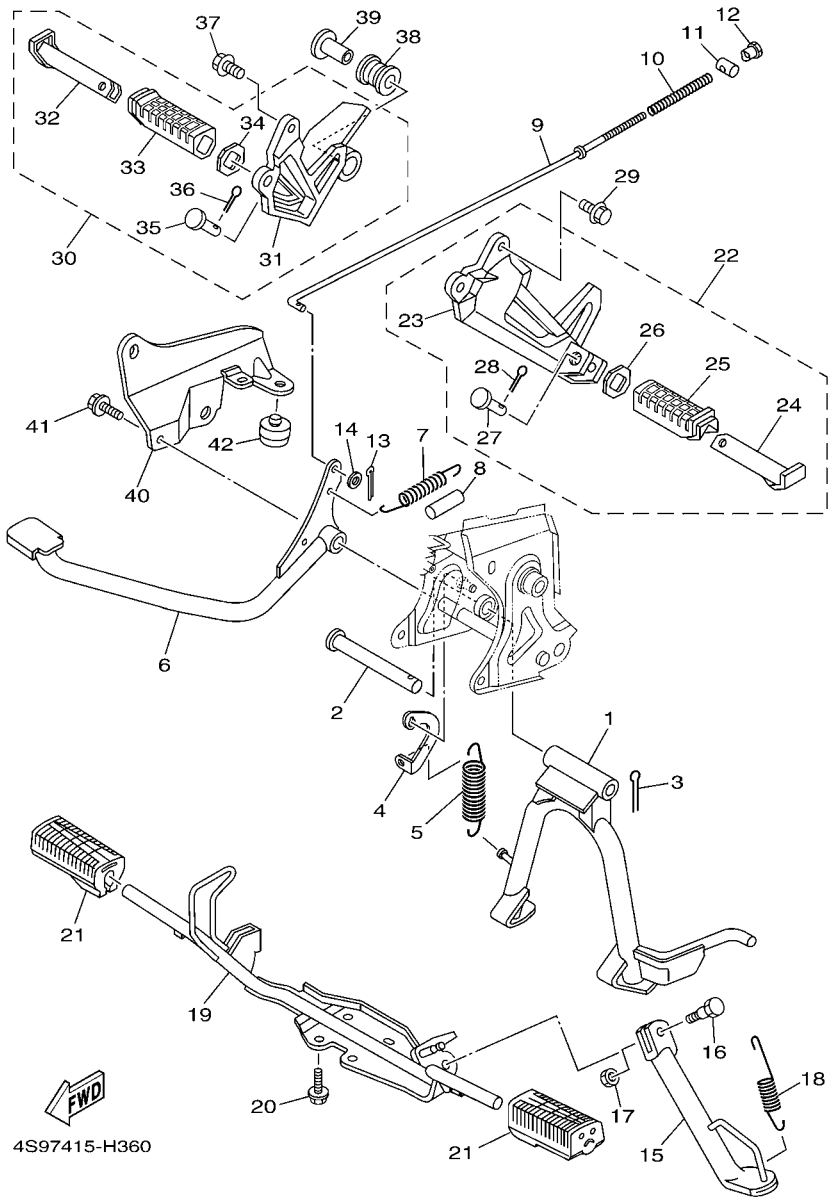


## FIG. 30 SOPORTE & APOYAPIE STAND & FOOTREST

| REF. Nº | CODIGO Nº PART NO. | DESCRIPCION DESCRIPTION | 40B3 | | | | | OBSERVACIONES REMARKS |
|---|---|---|---|---|---|---|---|---|
| 28 | 91401–25015 | .CHAVETA<br>.PIN, COTTER | 1 | | | | | |
| 29 | 95817–08020 | TORNILLO<br>BOLT, FLANGE | 2 | | | | | |
| 30 | 4S9–F7440–00 | APOYAPIE POSTERIOR COMPLETO 2<br>REAR FOOTREST ASSY 2 | 1 | | | | | |
| 31 | 4S9–F7462–00–WN | .SOPORTE, DE APOYAPIE 2<br>.BRACKET, FOOTREST 2 | 1 | | | | | CIS<br>CIS |
| 32 | 4S9–F7441–00 | .APOYAPIE POSTERIOR 2<br>.FOOTREST, REAR 2 | 1 | | | | | |
| 33 | 4S9–F7444–00 | .CUBIERTA APOYAPIE TRASERO<br>.COVER, REAR FOOTREST | 1 | | | | | |
| 34 | 4S9–F7445–00 | .PLACE 1<br>.PLATE 1 | 1 | | | | | |
| 35 | 90240–08140 | .PASADOR CON HOYO<br>.PIN, CLEVIS | 1 | | | | | |
| 36 | 91401–25015 | .CHAVETA<br>.PIN, COTTER | 1 | | | | | |
| 37 | 95817–08020 | TORNILLO<br>BOLT, FLANGE | 2 | | | | | |
| 38 | 4S9–F7424–00 | AMORTIGUADOR DE APOYAPIE 2<br>DAMPER, FOOTREST 2 | 1 | | | | | |
| 39 | 90387–10817 | ESPACIADOR<br>COLLAR | 1 | | | | | |
| 40 | 4S9–F194J–00 | SUPORTE DO SILENCIADOR<br>STAY, MUFFLER | 1 | | | | | |
| 41 | 95827–08016 | TORNILLO<br>BOLT, FLANGE | 1 | | | | | |
| 42 | 4S9–F4763–00 | COJIN DE ASIENTO 2<br>PAD, SEAT 2 | 1 | | | | | |

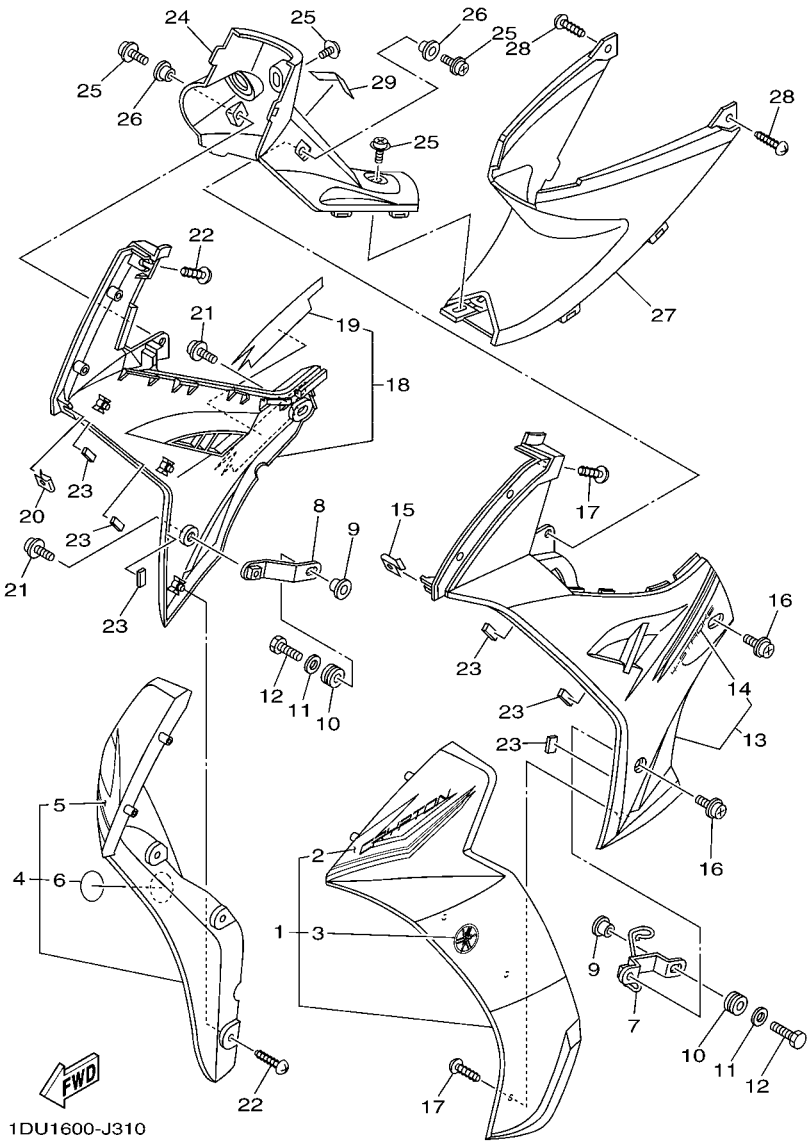


## FIG. 31 PATA PROTEGIDA LEG SHIELD

| REF. Nº | CODIGO Nº PART NO. | DESCRIPCION DESCRIPTION | 40B3 | | | | | OBSERVACIONES REMARKS |
|---|---|---|---|---|---|---|---|---|
| 1 | 4S9–XF831–10–P0 | PROTECCION DE PATA 1<br>LEG SHIELD 1 | 1 | | | | | UR PARA DRMK<br>UR FOR DRMK |
| | 4S9–XF831–10–P1 | PROTECCION DE PATA 1<br>LEG SHIELD 1 | 1 | | | | | UR PARA SMX<br>UR FOR SMX |
| | 4S9–XF831–10–P3 | PROTECCION DE PATA 1<br>LEG SHIELD 1 | 1 | | | | | UR PARA DPBMC<br>UR FOR DPBMC |
| 2 | 4S9–F8391–30 | .CALCOMANIA 1<br>.GRAPHIC, 1 | 1 | | | | | UR PARA DRMK<br>UR FOR DRMK |
| | 4S9–F8391–40 | .CALCOMANIA 1<br>.GRAPHIC, 1 | 1 | | | | | UR PARA SMX<br>UR FOR SMX |
| | 4S9–F8391–50 | .CALCOMANIA 1<br>.GRAPHIC, 1 | 1 | | | | | UR PARA DPBMC<br>UR FOR DPBMC |
| 3 | 4S9–F411B–00 | .EMBLEMA<br>.EMBLEM | 1 | | | | | |
| 4 | 4S9–XF832–30–P0 | PROTECCION DE PATA 2<br>LEG SHIELD 2 | 1 | | | | | UR PARA DRMK<br>UR FOR DRMK |
| | 4S9–XF832–30–P1 | PROTECCION DE PATA 2<br>LEG SHIELD 2 | 1 | | | | | UR PARA SMX<br>UR FOR SMX |
| | 4S9–XF832–30–P3 | PROTECCION DE PATA 2<br>LEG SHIELD 2 | 1 | | | | | UR PARA DPBMC<br>UR FOR DPBMC |
| 5 | 4S9–F8392–30 | .CALCOMANIA 2<br>.GRAPHIC, 2 | 1 | | | | | UR PARA DRMK<br>UR FOR DRMK |
| | 4S9–F8392–40 | .CALCOMANIA 2<br>.GRAPHIC, 2 | 1 | | | | | UR PARA SMX<br>UR FOR SMX |
| | 4S9–F8392–50 | .CALCOMANIA 2<br>.GRAPHIC, 2 | 1 | | | | | UR PARA DPBMC<br>UR FOR DPBMC |
| 6 | 4S9–F411B–00 | .EMBLEMA<br>.EMBLEM | 1 | | | | | |
| 7 | 4S9–F8321–00 | SOPORTE<br>STAY 1 | 1 | | | | | |
| 8 | 4S9–F8322–00 | SOPORTE 2<br>STAY 2 | 1 | | | | | |
| 9 | 90387–06814 | ESPACIADOR<br>COLLAR | 2 | | | | | |
| 10 | 90480–13018 | TAPON<br>GROMMET | 2 | | | | | |
| 11 | 90201–06557 | ARANDELA PLANA<br>WASHER, PLATE | 2 | | | | | |
| 12 | 97007–06020 | PERNO<br>BOLT | 2 | | | | | |
| 13 | 4S9–XF838–10–P0 | CUBIERTA INFERIOR<br>COVER, UNDER | 1 | | | | | UR SMX PARA DRMK<br>UR SMX FOR DRMK |
| | 4S9–XF838–10–P1 | CUBIERTA INFERIOR<br>COVER, UNDER | 1 | | | | | UR BS4 PARA SMX<br>UR BS4 FOR SMX |
| | 4S9–XF838–10–P3 | CUBIERTA INFERIOR<br>COVER, UNDER | 1 | | | | | UR PARA DPBMC<br>UR FOR DPBMC |
| 14 | 4S9–F8398–30 | .GRAFICO 5<br>.GRAPHIC, 5 | 1 | | | | | UR PARA DRMK<br>UR FOR DRMK |
| | 4S9–F8398–40 | .GRAFICO 5<br>.GRAPHIC, 5 | 1 | | | | | UR PARA SMX<br>UR FOR SMX |
| | 4S9–F8398–50 | .GRAFICO 5<br>.GRAPHIC, 5 | 1 | | | | | UR PARA DPBMC<br>UR FOR DPBMC |
| 15 | 90183–05807 | TUERCA DE RESORTE<br>NUT, SPRING | 1 | | | | | |

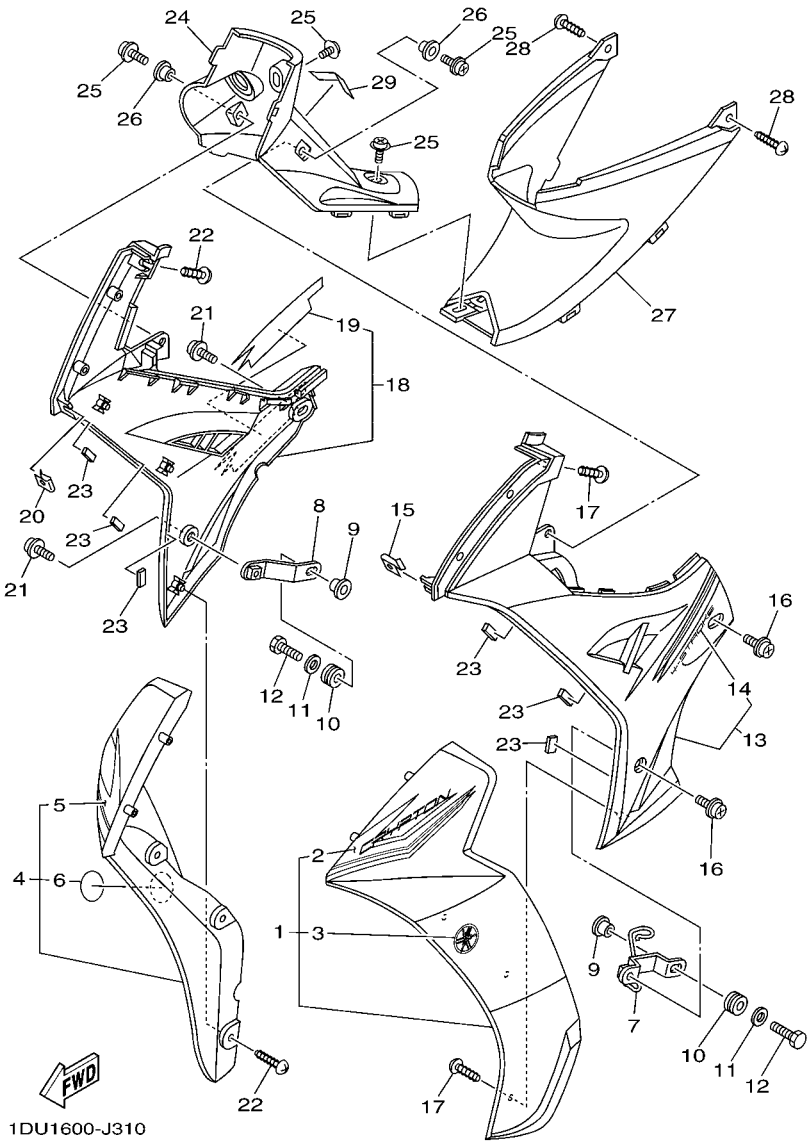


## FIG. 31 PATA PROTEGIDA LEG SHIELD

| REF. Nº | CODIGO Nº PART NO. | DESCRIPCION DESCRIPTION | 40B3 | | | | | OBSERVACIONES REMARKS |
|---|---|---|---|---|---|---|---|---|
| 16 | 90159–06817 | TORNILLO CON VALONA<br>SCREW, WITH WASHER | 2 | | | | | |
| 17 | 97707–50012 | TORNILLO<br>SCREW, TRUSS HEAD TAPPING | 6 | | | | | |
| 18 | 4S9–XF839–10–P0 | CUBIERTA INFERIOR 2<br>COVER, UNDER 2 | 1 | | | | | UR SMX PARA DRMK<br>UR SMX FOR DRMK |
| | 4S9–XF839–10–P1 | CUBIERTA INFERIOR 2<br>COVER, UNDER 2 | 1 | | | | | UR BS4 PARA SMX<br>UR BS4 FOR SMX |
| | 4S9–XF839–10–P3 | CUBIERTA INFERIOR 2<br>COVER, UNDER 2 | 1 | | | | | UR PARA DPBMC<br>UR FOR DPBMC |
| 19 | 4S9–F8399–30 | .CALCOMANIA 6<br>.GRAPHIC, 6 | 1 | | | | | UR PARA DRMK<br>UR FOR DRMK |
| | 4S9–F8399–40 | .CALCOMANIA 6<br>.GRAPHIC, 6 | 1 | | | | | UR PARA SMX<br>UR FOR SMX |
| | 4S9–F8399–50 | .CALCOMANIA 6<br>.GRAPHIC, 6 | 1 | | | | | UR PARA DPBMC<br>UR FOR DPBMC |
| 20 | 90183–05807 | TUERCA DE RESORTE<br>NUT, SPRING | 1 | | | | | |
| 21 | 90159–06817 | TORNILLO CON VALONA<br>SCREW, WITH WASHER | 2 | | | | | |
| 22 | 97707–50012 | TORNILLO<br>SCREW, TRUSS HEAD TAPPING | 6 | | | | | |
| 23 | 4S9–F8371–00 | AMORTIGUADOR<br>DAMPER | 6 | | | | | |
| 24 | 4S9–F842M–00 | CUBIERTA 1<br>COVER 1 | 1 | | | | | |
| 25 | 90159–06817 | TORNILLO CON VALONA<br>SCREW, WITH WASHER | 4 | | | | | |
| 26 | 90387–068E9 | ESPACIADOR<br>COLLAR | 2 | | | | | |
| 27 | 4S9–F842N–00 | CUBIERTA 2<br>COVER 2 | 1 | | | | | |
| 28 | 97707–50016 | TORNILLO<br>SCREW, TRUSS HEAD TAPPING | 2 | | | | | |
| 29 | 40B–F1568–S0 | ETIQUETA DE PRECAUCION<br>LABEL, WARNING | 1 | | | | | |

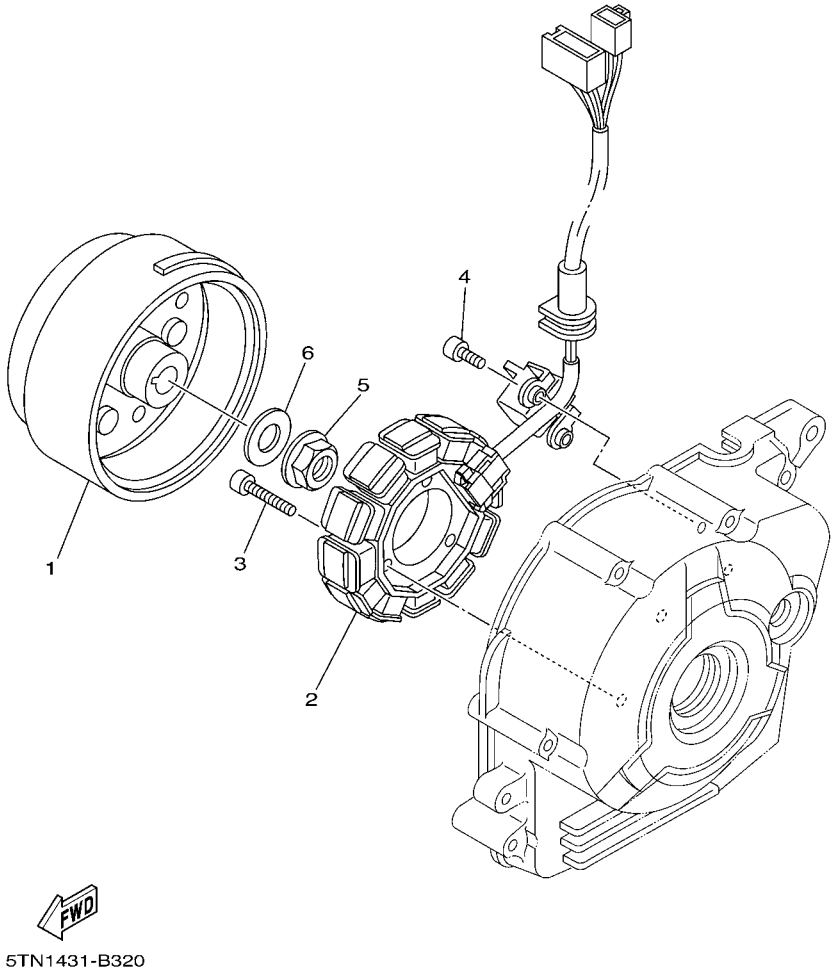


## FIG. 32 GENERADOR GENERATOR

| REF. Nº | CODIGO Nº PART NO. | DESCRIPCION DESCRIPTION | 40B3 | | | | | OBSERVACIONES REMARKS |
|---|---|---|---|---|---|---|---|---|
| 1 | 4S9–H1450–00 | ROTOR COMPLETO<br>ROTOR ASSY | 1 | | | | | |
| 2 | 40B–H1410–00 | ESTATOR COMPLETO<br>STATOR ASSY | 1 | | | | | |
| 3 | 91317–06025 | PERNO<br>BOLT | 3 | | | | | |
| 4 | 91317–06014 | PERNO<br>BOLT | 2 | | | | | |
| 5 | 95707–12500 | TUERCA DE BRIDA<br>NUT, FLANGE | 1 | | | | | |
| 6 | 90201–122H1 | ARANDELA PLANA<br>WASHER, PLATE | 1 | | | | | |

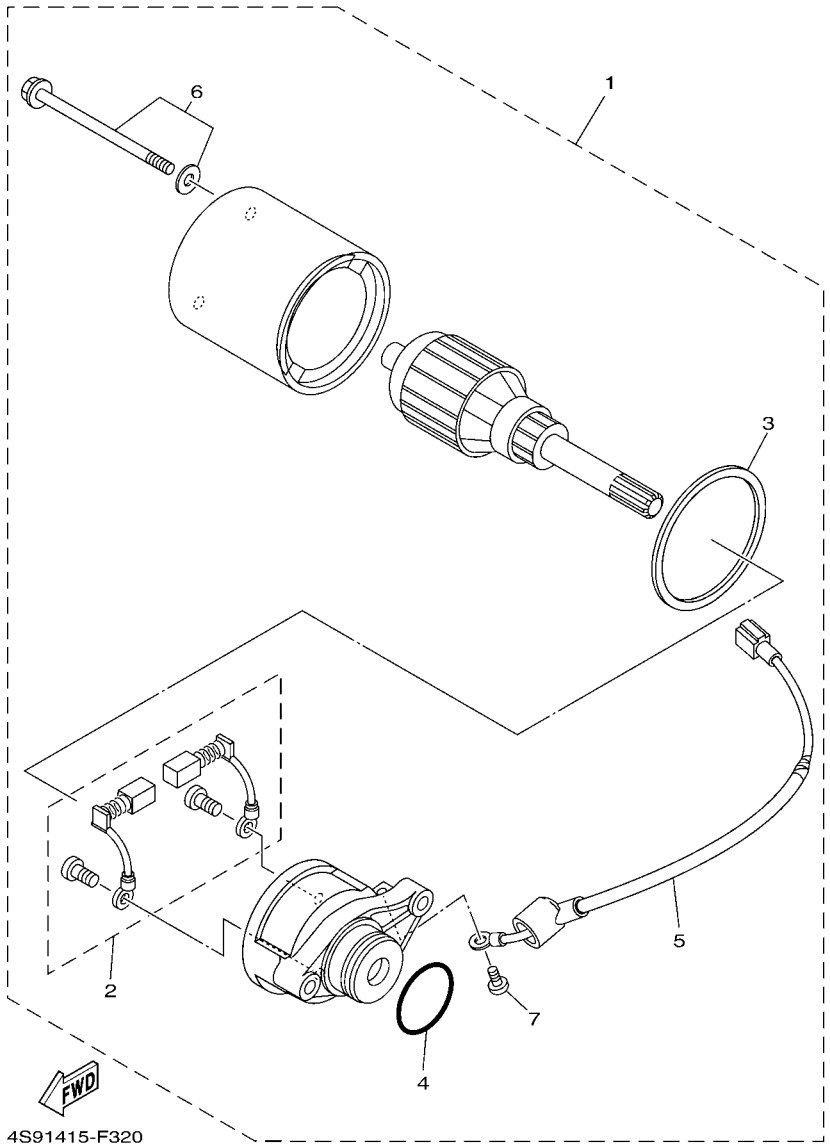


## FIG. 33 MOTOR DE ARRANQUE STARTING MOTOR

| REF. Nº | CODIGO Nº PART NO. | DESCRIPCION DESCRIPTION | 40B3 | | | | | OBSERVACIONES REMARKS |
|---|---|---|---|---|---|---|---|---|
| 1 | 4S9–H1800–00 | MOTOR DE ARRANQUE COMPLETO<br>STARTING MOTOR ASSY | 1 | | | | | |
| 2 | 4S9–H1801–00 | .JUEGO DE ESCOBILLA<br>.BRUSH SET | 1 | | | | | |
| 3 | 4S9–H1834–00 | .ANILLO<br>.RING | 1 | | | | | |
| 4 | 93210–23614 | .ANILLO O<br>.O-RING | 1 | | | | | |
| 5 | 4S9–H183G–00 | .CABLE DEL MOTOR COMPL.<br>.CORD COMP. | 1 | | | | | |
| 6 | 5WV–H1828–00 | .TORNILLO DE EMPUJE 2<br>.BOLT 2 | 2 | | | | | |
| 7 | 9890N–05008 | .TORNILLO DE LIGAR<br>.SCREW, BIND | 1 | | | | | |

## FIG. 34 LUZ DE DESTELLADOR FLASHER LIGHT

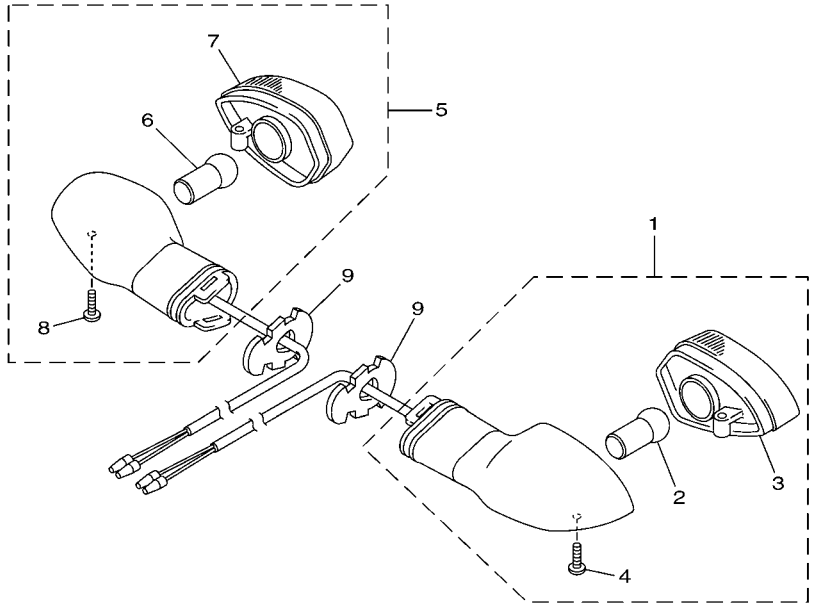

4S91415-F390

| REF. Nº | CODIGO Nº PART NO. | DESCRIPCION DESCRIPTION | 40B3 | | | | | OBSERVACIONES REMARKS |
|---|---|---|---|---|---|---|---|---|
| 1 | 4S9–H3330–00 | DESTELLADOR DE LUZ TRAS.COMPL.<br>REAR FLASHER LIGHT ASSY 1 | 1 | | | | | |
| 2 | 3D9–H3311–10 | .BOMBILLA (12V-10W)<br>.BULB, FLASHER (12V-10W) | 1 | | | | | |
| 3 | 3D9–H334A–00 | .LENTES COMPLETO 2<br>.LENS COMP 2 | 1 | | | | | |
| 4 | 3D9–H3333–10 | .TORNILLO ACCESORIO DE LENTE<br>.SCREW, LENS FITTING | 1 | | | | | |
| 5 | 4S9–H3340–00 | DESTELLADOR DE LUZ TRAS.COMPL.<br>REAR FLASHER LIGHT ASSY 2 | 1 | | | | | |
| 6 | 3D9–H3311–10 | .BOMBILLA (12V-10W)<br>.BULB, FLASHER (12V-10W) | 1 | | | | | |
| 7 | 3D9–H333A–00 | .LENTES COMPLETO 1<br>.LENS COMP 1 | 1 | | | | | |
| 8 | 3D9–H3333–10 | .TORNILLO ACCESORIO DE LENTE<br>.SCREW, LENS FITTING | 1 | | | | | |
| 9 | 3D9–H3318–10 | SOPORTE DE DESTELLADOR 1<br>STAY, FLASHER 1 | 2 | | | | | |

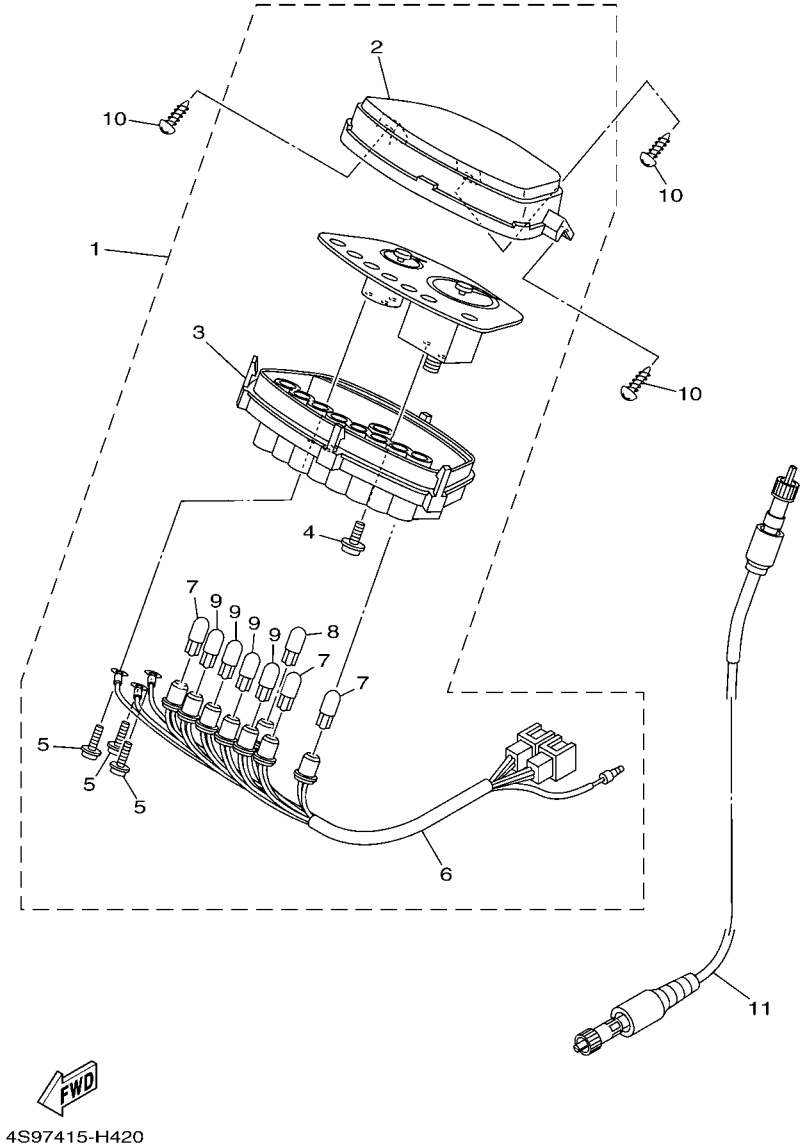


## FIG. 35 MEDIDOR METER

| REF. Nº | CODIGO Nº PART NO. | DESCRIPCION DESCRIPTION | 40B3 | | | | | OBSERVACIONES REMARKS |
|---|---|---|---|---|---|---|---|---|
| 1 | 4S9–H3510–00 | VELOCIMETRO COMPL.<br>SPEEDOMETER ASSY | 1 | | | | | |
| 2 | 4S9–H3511–00 | .LENTE DE VELOCIMETRO<br>.LENS, SPEEDOMETER | 1 | | | | | |
| 3 | 4S9–H353F–00 | .CAJA DE MEDIDOR INFERIOR<br>.CASE, METER LOWER | 1 | | | | | |
| 4 | 90167–04021 | .TORNILLO DE ROSCA HEMBRA<br>.SCREW, TAPPING | 2 | | | | | |
| 5 | 90159–03102 | .TORNILLO CON VALONA<br>.SCREW, WITH WASHER | 3 | | | | | |
| 6 | 4S9–H3509–00 | .ENCASTRE DE CABLE COMPLETO<br>.SOCKET CORD ASSY | 1 | | | | | |
| 7 | 4S9–H3517–00 | .AMPOLLETA 1 (T-10 12V-1.7W)<br>.BULB, METER 1 (T-10 12V-1.7W) | 3 | | | | | |
| 8 | 4S9–H3517–10 | .AMPOLLETA 1 (T-10 12V-1.7W)<br>.BULB 1 (T-10 12V-1.7W BULE) | 1 | | | | | |
| 9 | 4S9–H3518–00 | .AMPOLLETA 2 (T-10 12V-3W)<br>.BULB, METER 2 (T-10 12V-3W) | 4 | | | | | |
| 10 | 97707–50016 | TORNILLO<br>SCREW, TRUSS HEAD TAPPING | 3 | | | | | |
| 11 | 4S9–H3550–00 | CABLE DE VELOCIMETRO COMPLETO<br>SPEEDOMETER CABLE ASSY | 1 | | | | | |

## FIG. 36 FARO DELANTERO HEADLIGHT

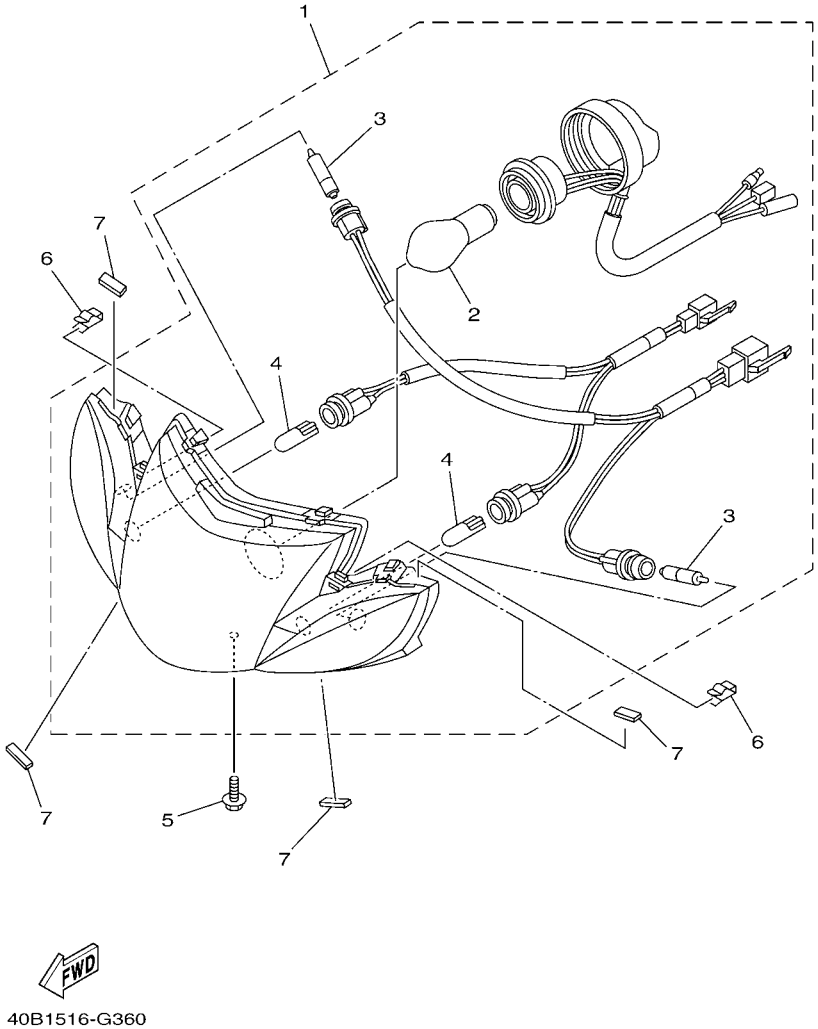


| REF. Nº | CODIGO Nº PART NO. | DESCRIPCION DESCRIPTION | 40B3 | | | | | OBSERVACIONES REMARKS |
|---|---|---|---|---|---|---|---|---|
| 1 | 4S9–H4300–10 | FARO DELANTERO COMPLETO<br>HEADLIGHT ASSY | 1 | | | | | |
| 2 | 4S9–H4314–00 | .BOMBILLA DE FARO DELANTERO<br>.BULB, HEADLIGHT (12V 35/35W) | 1 | | | | | |
| 3 | 4S9–H3311–00 | .BOMBILLA DE DESTELLADOR<br>.BULB, FLASHER (12V 21W) | 2 | | | | | |
| 4 | 4S9–H4347–00 | .AMPOLLETA LUZ PILOTO (12V 5W)<br>.BULB, PILOT LIGHT (12V 5W) | 2 | | | | | |
| 5 | 90119–05004 | TORNILLO CON ARANDELA<br>BOLT, WITH WASHER | 1 | | | | | |
| 6 | 4S9–H4374–00 | PRESILLA<br>CLIP | 2 | | | | | |
| 7 | 4S9–F6113–10 | AMORTIGUADOR<br>DAMPER | 4 | | | | | |

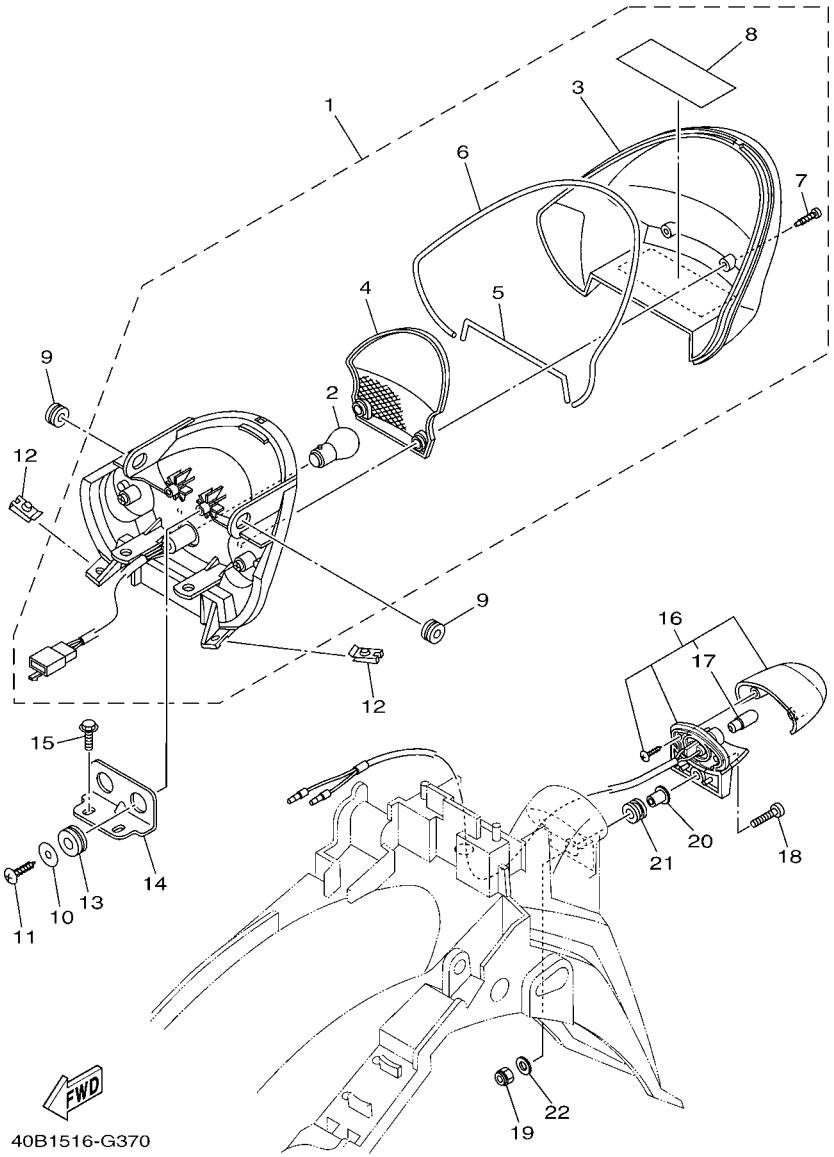


## FIG. 37 LUZ DE COLA — TAILLIGHT

| REF. Nº | CODIGO Nº PART NO. | DESCRIPCION DESCRIPTION | 40B3 | | | | | OBSERVACIONES REMARKS |
|---|---|---|---|---|---|---|---|---|
| 1 | 40B–H4710–00 | UNIDAD FARO TRASERO COMPL.<br>TAILLIGHT UNIT ASSY | 1 | | | | | |
| 2 | 4S9–H4714–00 | .BOMBILLA (12V 21/5W)<br>.BULB (12V 21/5W) | 1 | | | | | |
| 3 | 40B–H4716–00 | .CUBIERTA DE FARO TRASERO<br>.COVER, TAILLIGHT | 1 | | | | | |
| 4 | 4S9–H4721–00 | .LENTE DE FARO TRASERO<br>.LENS, TAILLIGHT | 1 | | | | | |
| 5 | 4S9–H4712–00 | .JUNTA, LUZ DE COLA<br>.GASKET, TAILLIGHT | 1 | | | | | |
| 6 | 4S9–H4723–00 | .EMPAQUE LENTE FARO TRASERO<br>.GASKET, TAIL LENS | 1 | | | | | |
| 7 | 97702–40120 | .TORNILLO ROSCA HEMBRA<br>.SCREW, TAPPING | 2 | | | | | |
| 8 | 40B–H4763–00 | .CALCOMANIA CUBIERTA COLA<br>.GRAPHIC | 1 | | | | | |
| 9 | 90480–13005 | TAPON<br>GROMMET | 2 | | | | | |
| 10 | 90201–06071 | ARANDELA PLANA<br>WASHER, PLATE | 2 | | | | | |
| 11 | 97707–50014 | TORNILLO<br>SCREW, TRUSS HEAD TAPPING | 2 | | | | | |
| 12 | 90183–05807 | TUERCA DE RESORTE<br>NUT, SPRING | 2 | | | | | |
| 13 | 90480–18895 | TAPON<br>GROMMET | 2 | | | | | |
| 14 | 4S9–H4702–00 | SOPORTE DE FARO TRASERO<br>BRACKET, TAILLIGHT | 1 | | | | | |
| 15 | 95807–06012 | TORNILLO<br>BOLT, FLANGE | 2 | | | | | |
| 16 | 40B–H4740–00 | LUZ DE LICENCIA COMPLETA<br>LICENCE LIGHT ASSY | 1 | | | | | |
| 17 | 40B–H4744–00 | .BOMBILLA (12V-5W)<br>.BULB (12V-5W) | 1 | | | | | |
| 18 | 98507–05020 | TORNILLO DE CABEZA PLANA<br>SCREW, PAN HEAD | 1 | | | | | |
| 19 | 95607–05100 | TUERCA AUTOBLOCANTE<br>NUT, U | 1 | | | | | |
| 20 | 90387–05003 | ESPACIADOR<br>COLLAR | 1 | | | | | |
| 21 | 90480–11008 | TAPON<br>GROMMET | 1 | | | | | |
| 22 | 90201–05812 | ARANDELA PLANA<br>WASHER, PLATE | 1 | | | | | |

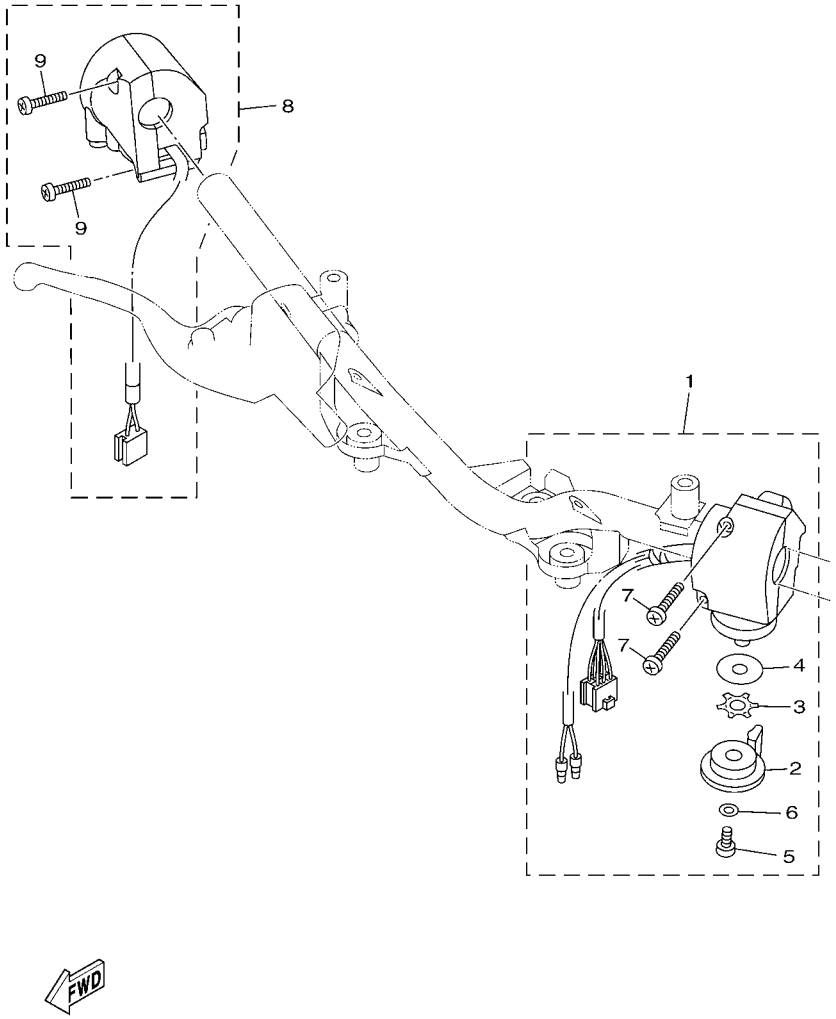


## FIG. 38 INTERRUPTOR DE MANILLAR&PALANC HANDLE SWITCH & LEVER

| REF. Nº | CODIGO Nº PART NO. | DESCRIPCION DESCRIPTION | 40B3 | | | | | OBSERVACIONES REMARKS |
|---|---|---|---|---|---|---|---|---|
| 1 | 4S9–H3973–00 | INTERRUPTOR DE MANIJA 3<br>SWITCH, HANDLE 3 | 1 | | | | | |
| 2 | 4S9–H3941–00 | .PALANCA DE ARRANQUE<br>.LEVER, STARTER | 1 | | | | | |
| 3 | 90209–10131 | .ARANDELA DE SEPARACION<br>.WASHER | 1 | | | | | |
| 4 | 4S9–H397X–00 | .ESPACIADOR<br>.SPACER | 1 | | | | | |
| 5 | 9850M–06008 | .TORNILLO DE CABEZA CON PLANA<br>.SCREW, PAN HEAD | 1 | | | | | |
| 6 | 92907–06200 | .ARANDELA<br>.WASHER | 1 | | | | | |
| 7 | 9850M–05025 | .TORNILLO DE CABEZA CON PLANA<br>.SCREW, PAN HEAD | 2 | | | | | |
| 8 | 40B–H3976–00 | INTERRUPTOR DE MANIJA 1<br>SWITCH, HANDLE 1 | 1 | | | | | |
| 9 | 9850M–05025 | .TORNILLO DE CABEZA CON PLANA<br>.SCREW, PAN HEAD | 2 | | | | | |

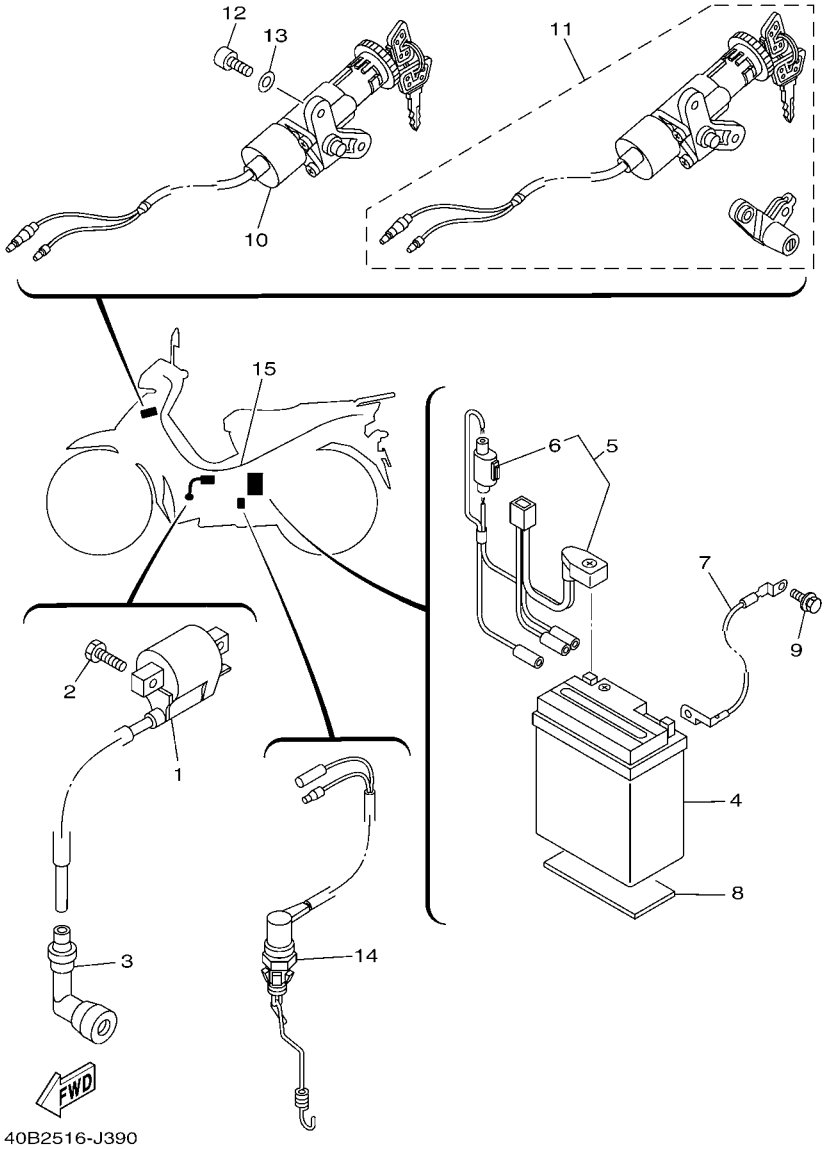


## FIG. 39 EQUIPO ELECTRICO 1 ELECTRICAL 1

| REF. Nº | CODIGO Nº PART NO. | DESCRIPCION DESCRIPTION | 40B3 | | | | | OBSERVACIONES REMARKS |
|---|---|---|---|---|---|---|---|---|
| 1 | 4S9–H2310–00 | BOBINA DE ENCENDIDO COMPLETA<br>IGNITION COIL ASSY | 1 | | | | | |
| 2 | 97007–06016 | PERNO<br>BOLT | 2 | | | | | |
| 3 | 4S9–H2370–10 | TAPON DE BUJIA COMPLT<br>PLUG CAP ASSY | 1 | | | | | |
| 4 | 40B–H2110–00 | BATERIA COMPLETA (MS MTX7L-BS)<br>BATTERY ASSY (MS MTX7L-BS) | 1 | | | | | |
| 5 | 4S9–H2115–00 | CABLE CONDUCTOR POSITIVO<br>WIRE, PLUS LEAD | 1 | | | | | |
| 6 | 4S9–H2151–00 | .FUSIBLE (10A)<br>.FUSE (10A) | 1 | | | | | |
| 7 | 4S9–H2116–00 | CABLE CONDUCTOR NEGATIVO<br>WIRE, MINUS LEAD | 1 | | | | | |
| 8 | 4S9–H2176–00 | AMORTIGUADOR<br>DAMPER | 1 | | | | | |
| 9 | 97527–06510 | PERNO CON ARANDELA<br>BOLT, WITH WASHER | 1 | | | | | |
| 10 | 4S9–H2501–01 | LLAVE DE IGNICION COMPLT<br>MAIN SWITCH STEERING LOCK | 1 | | | | | |
| 11 | 4S9–XH254–01 | JUEGO DE LLAVE<br>KEY SET | 1 | | | | | |
| 12 | 90149–06811 | TORNILLO DE REGLAJE<br>SCREW | 2 | | | | | |
| 13 | 90201–07808 | ARANDELA PLANA<br>WASHER, PLATE | 2 | | | | | |
| 14 | 4S9–H2530–01 | INTERRUPTOR DE PARADA COMPLETO<br>STOP SWITCH ASSY | 1 | | | | | |
| 15 | 40B–H2590–01 | CONJUNTO DE CABLES<br>WIRE HARNESS ASSY | 1 | | | | | |

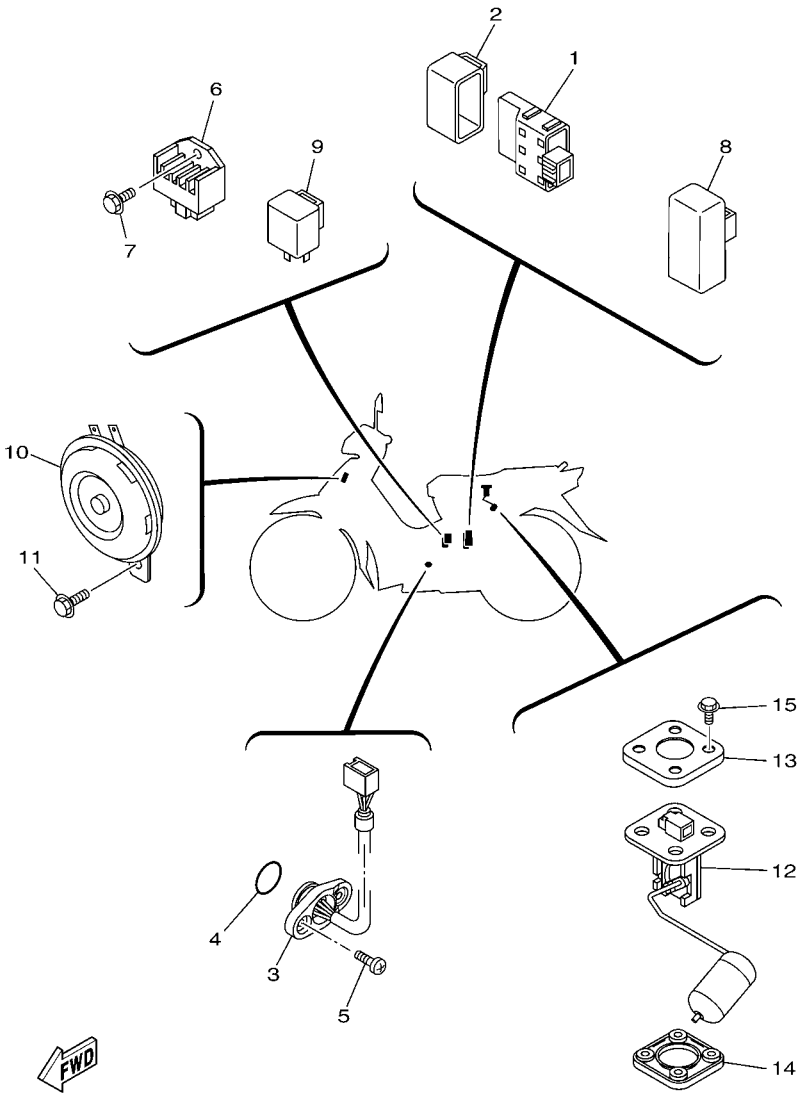


## FIG. 40 EQUIPO ELECTRICO 2 ELECTRICAL 2

| REF. Nº | CODIGO Nº PART NO. | DESCRIPCION DESCRIPTION | 40B3 | | | | | OBSERVACIONES REMARKS |
|---|---|---|---|---|---|---|---|---|
| 1 | 4S9–H5540–00 | UNIDAD C.D.I. COMPLETA<br>C.D.I. UNIT ASSY | 1 | | | | | |
| 2 | 4S9–H5546–00 | BANDA<br>BAND | 1 | | | | | |
| 3 | 4S9–H2540–00 | INTERRUPTOR NEUTRAL COMPL<br>NEUTRAL SWITCH ASSY | 1 | | | | | |
| 4 | 93210–22806 | ANILLO O<br>O-RING | 1 | | | | | |
| 5 | 98507–05010 | TORNILLO DE CABEZA CON PLANA<br>SCREW, PAN HEAD | 2 | | | | | |
| 6 | 4S9–H1960–00 | RECTIFICADOR Y REGULADOR<br>RECTIFIER & REGULATOR ASSY | 1 | | | | | |
| 7 | 95027–06014 | PERNO, DE BRIDA<br>BOLT, FLANGE | 1 | | | | | |
| 8 | 4S9–H1940–00 | CONJUNTO ARRANCADOR RELEVO<br>STARTER RELAY ASSY | 1 | | | | | |
| 9 | 4S9–H3350–00 | RELE DE DESTELLADOR COMPL.<br>FLASHER RELAY ASSY | 1 | | | | | |
| 10 | 5WB–H3371–01 | BOCINA<br>HORN | 1 | | | | | |
| 11 | 95807–06010 | TORNILLO<br>BOLT, FLANGE | 1 | | | | | |
| 12 | 4S9–H5752–00 | UNIDAD TRANSM. MED. COMBUST.<br>SENDER UNIT ASSY, FUEL METER | 1 | | | | | |
| 13 | 4S9–H5757–00 | SEGURO<br>RETAINER | 1 | | | | | |
| 14 | 4S9–H5753–00 | EMPAQUE DE UNIDAD TRANSMISORA<br>GASKET, SENDER UNIT | 1 | | | | | |
| 15 | 90119–05071 | TORNILLO CON ARANDELA<br>BOLT, WITH WASHER | 4 | | | | | |

INDICE NUMERICO
NUMERICAL INDEX

| CODIGO Nº PART NO. | REF. Nº |
|---|---|
| 4ST–11134–11 | 1 – 2 |
| 5TN–14103–00 | 7 – 22 |
| 4GL–14104–00 | 7 – 21 |
| 5TN–1410A–10 | 7 – 17 |
| 5TN–14112–00 | 7 – 5 |
| 5TN–14131–00 | 7 – 4 |
| 4S9–14141–18 | 7 – 15 |
| 2MM–14142–17 | 7 – 12 |
| 18A–14143–21 | 7 – 13 |
| 5TN–14147–00 | 7 – 7 |
| 5TN–14148–00 | 7 – 14 |
| 5TN–14150–10 | 7 – 28 |
| 802–14161–00 | 7 – 2 |
| 3RW–14174–00 | 7 – 18 |
| 4GL–14185–00 | 7 – 16 |
| 353–14186–00 | 7 – 9 |
| 5LW–14191–00 | 7 – 25 |
| 32N–14196–00 | 7 – 26 |
| 4NM–14198–00 | 7 – 3 |
| 3DM–14216–00 | 7 – 30 |
| 5TN–14216–00 | 7 – 27 |
| 4GL–14239–00 | 7 – 8 |
| 4S9–1490J–00 | 7 – 6 |
| 5TN–14940–00 | 7 – 19 |
| 256–14956–01 | 7 – 29 |
| 5TN–24423–00 | 7 – 20 |
| 4S9–E1111–10 | 1 – 1 |
| 4S9–E111F–00 | 4 – 4 |
| 4S9–E1166–00 | 9 – 4 |
| 4S9–E1181–00 | 1 – 13 |
| 4S9–E1185–00 | 1 – 5 |
| 5WB–E1186–00 | 1 – 8 |
| 4S9–E1310–00–B0 | 1 – 16 |
| 4S9–E1351–00 | 1 – 17 |
| 4S9–E1422–00 | 2 – 5 |
| 4S9–E1603–10 | 2 – 11 |
| 4S9–E1631–10–A0 | 2 – 8 |
| 5WB–E1633–00 | 2 – 9 |
| 4S9–E1651–00 | 2 – 4 |
| 4S9–E1681–00 | 2 – 2 |
| 4S9–E2111–00 | 3 – 1 |
| 4S9–E2114–00 | 3 – 4 |
| 4S9–E2117–00 | 3 – 6 |
| 4S9–E2118–00 | 3 – 5 |
| 4S9–E2119–00 | 3 – 3 |
| 4S9–E2121–00 | 3 – 2 |
| 4S9–E2126–00 | 3 – 7 |
| 4S9–E2151–00 | 3 – 8 |

| CODIGO Nº PART NO. | REF. Nº |
|---|---|
| 5WB–E2156–00 | 3 – 11 |
| 5WB–E2159–00 | 3 – 9 |
| 4S9–E2170–01 | 4 – 1 |
| 4S9–E2176–00 | 4 – 6 |
| 5WB–E2210–00 | 4 – 13 |
| 5WB–E2213–00 | 4 – 14 |
| 4S9–E2231–00 | 4 – 10 |
| 4S9–E2241–00 | 4 – 11 |
| 4S9–E3104–00 | 5 – 1 |
| 4S9–E3324–00 | 5 – 9 |
| 4S9–E3325–00 | 5 – 2 |
| 4S9–E3329–00 | 5 – 4 |
| 4S9–E3411–00 | 5 – 8 |
| 4S9–E3451–00 | 5 – 10 |
| 4S9–E3542–00 | 8 – 23 |
| 4S9–E3586–00 | 6 – 1 |
| 4S9–E3595–00 | 6 – 2 |
| 4S9–E4101–00 | 7 – 1 |
| 4S9–E4197–00 | 7 – 31 |
| 4S9–E4411–10 | 6 – 6 |
| 4S9–E4412–00 | 6 – 8 |
| 4S9–E4423–00 | 6 – 12 |
| 4S9–E443E–00 | 6 – 14 |
| 4S9–E4451–00 | 6 – 7 |
| 4S9–E4452–00 | 6 – 11 |
| 4S9–E4453–00 | 6 – 9 |
| 4S9–E4457–00 | 6 – 10 |
| 4S9–E4613–00 | 8 – 17 |
| 4S9–E4711–10 | 8 – 1 |
| 4S9–E4718–00 | 8 – 2 |
| 4S9–E4747–10 | 8 – 9 |
| 4S9–E4766–00 | 8 – 4 |
| 5WB–E4766–10 | 8 – 6 |
| 4S9–E4803–00 | 8 – 21 |
| 4S9–E4806–00 | 8 – 28 |
| 4S9–E4881–00 | 8 – 19 |
| 4S9–E4882–00 | 8 – 25 |
| 4S9–E4883–00 | 8 – 30 |
| 4S9–E5113–00 | 10 – 11 |
| 4S9–E5150–00 | 9 – 1 |
| 4S9–E5155–00 | 9 – 6 |
| 4S9–E5316–00 | 9 – 15 |
| 4S9–E5362–00 | 10 – 22 |
| 4S9–E5371–00 | 9 – 3 |
| 4S9–E5411–00 | 10 – 1 |
| 4S9–E5418–00 | 10 – 12 |
| 4S9–E5421–00 | 10 – 17 |
| 4S9–E5451–00 | 10 – 2 |

| CODIGO Nº PART NO. | REF. Nº |
|---|---|
| 4S9–E5461–00 | 10 – 18 |
| 4S9–E5492–00 | 10 – 16 |
| 4S9–E5512–00 | 12 – 1 |
| 4S9–E5524–00 | 12 – 3 |
| 4S9–E5580–00 | 12 – 5 |
| 4S9–E5583–00 | 12 – 6 |
| 4S9–E5620–00 | 11 – 11 |
| 4S9–E5641–00 | 11 – 2 |
| 4S9–E5644–00 | 11 – 6 |
| | 12 – 4 |
| 4S9–E5660–00 | 11 – 1 |
| 4S9–E5664–00 | 11 – 9 |
| 4S9–E5664–10 | 11 – 10 |
| 4S9–E5671–00 | 11 – 4 |
| 4S9–E6135–00 | 13 – 24 |
| 4S9–E6150–00 | 13 – 13 |
| 4S9–E6154–00 | 13 – 20 |
| 3S0–E6321–00 | 13 – 16 |
| 4S9–E6324–00 | 13 – 15 |
| 4S9–E6346–00 | 9 – 2 |
| 4S9–E6350–00 | 13 – 21 |
| 4S9–E6351–00 | 13 – 17 |
| 4S9–E6356–00 | 13 – 27 |
| 4S9–E6357–00 | 13 – 26 |
| 4S9–E6371–00 | 13 – 14 |
| 4S9–E6512–00 | 13 – 6 |
| 4S9–E6586–00 | 13 – 7 |
| 4S9–E6611–00 | 13 – 2 |
| 4S9–E6620–00 | 13 – 3 |
| 4S9–E6626–00 | 13 – 4 |
| 4S9–E7121–00 | 14 – 6 |
| 4S9–E7131–00 | 14 – 2 |
| 4S9–E7141–00 | 14 – 3 |
| 4S9–E7211–00 | 14 – 15 |
| 4S9–E7231–00 | 14 – 14 |
| 4S9–E7241–00 | 14 – 13 |
| 4S9–E7402–00 | 14 – 10 |
| 4S9–E7411–00 | 14 – 1 |
| 4S9–E8101–00 | 16 – 1 |
| 4S9–E8110–00 | 16 – 24 |
| 4S9–E8113–00 | 16 – 25 |
| 4S9–E8120–00 | 15 – 7 |
| 4S9–E8140–00 | 16 – 9 |
| 4S9–E8152–00 | 16 – 5 |
| 4S9–E8172–00 | 16 – 3 |
| 4S9–E8173–00 | 16 – 19 |
| 4S9–E8179–00 | 16 – 2 |
| 4S9–E817A–00 | 16 – 20 |

| CODIGO Nº PART NO. | REF. Nº |
|---|---|
| 4S9–E8181–00 | 16 – 4 |
| 4S9–E8185–00 | 15 – 2 |
| 4S9–E8186–00 | 16 – 21 |
| 4S9–E8337–00 | 16 – 13 |
| 4S9–E8511–00 | 15 – 9 |
| 4S9–E8512–00 | 15 – 10 |
| 4S9–E8531–00 | 15 – 8 |
| 4S9–E8540–00 | 15 – 1 |
| 4S9–E8542–00 | 15 – 5 |
| 4S9–E8699–00 | 16 – 10 |
| 40B–F1110–02 | 17 – 1 |
| 4S9–F111D–00 | 17 – 11 |
| 4S9–F113B–00 | 17 – 8 |
| 40B–F113J–00 | 18 – 14 |
| 4S9–F117K–00 | 24 – 17 |
| 4S9–F117R–00 | 17 – 6 |
| 4S9–F139R–00 | 17 – 5 |
| 4S9–F139U–00 | 17 – 10 |
| 40B–F1511–00–P0 | 18 – 1 |
| 40B–F1511–00–P1 | 18 – 1 |
| 40B–F1511–00–P3 | 18 – 1 |
| 4S9–F1518–01 | 18 – 5 |
| 4S9–F153E–00 | 19 – 17 |
| 4S9–F1556–01 | 18 – 2 |
| 40B–F1568–S0 | 31 – 29 |
| 40B–F1611–01 | 18 – 9 |
| 40B–F1668–20 | 20 – 13 |
| 4S9–F1679–20 | 17 – 7 |
| 40B–F1685–00 | 18 – 12 |
| 4S9–F1721–00 | 19 – 1 |
| 4S9–F173E–30 | 19 – 4 |
| 4S9–F173E–40 | 19 – 4 |
| 4S9–F173E–50 | 19 – 4 |
| 4S9–F173F–30 | 19 – 10 |
| 4S9–F173F–40 | 19 – 10 |
| 4S9–F173F–50 | 19 – 10 |
| 4S9–F194J–00 | 30 – 40 |
| 4S9–F2100–01–WN | 20 – 1 |
| 4S9–F2123–00 | 20 – 2 |
| 4S9–F2141–00 | 20 – 4 |
| 4S9–F2151–01 | 20 – 3 |
| 4S9–F2210–00 | 20 – 14 |
| 4S9–F2310–00 | 20 – 8 |
| 4S9–F2311–00 | 20 – 9 |
| 4S9–F2312–00 | 20 – 10 |
| 4S9–F2315–00 | 20 – 12 |
| 4S9–F3100–00 | 22 – 1 |
| 4S9–F3102–00 | 22 – 2 |

| CODIGO Nº PART NO. | REF. Nº |
|---|---|
| 4S9–F3103–00 | 22 – 17 |
| 4S9–F3110–00 | 22 – 7 |
| | 22 – 22 |
| 4S9–F3111–00 | 22 – 15 |
| | 22 – 30 |
| 4S9–F3126–00 | 22 – 3 |
| 4S9–F3136–00 | 22 – 18 |
| 4S9–F3141–00 | 22 – 14 |
| | 22 – 29 |
| 4RT–F3144–10 | 22 – 13 |
| | 22 – 28 |
| 4RT–F3145–01 | 22 – 4 |
| | 22 – 19 |
| 2JG–F3147–00 | 22 – 16 |
| | 22 – 31 |
| 4S9–F3152–00 | 22 – 10 |
| | 22 – 25 |
| 4RT–F3153–00 | 22 – 5 |
| | 22 – 20 |
| 4S9–F3157–00 | 22 – 9 |
| | 22 – 24 |
| 4S9–F3170–00 | 22 – 8 |
| | 22 – 23 |
| 4S9–F331E–00 | 21 – 25 |
| 4S9–F3340–00 | 22 – 32 |
| 4S9–F3346–00 | 22 – 34 |
| 5LK–F3356–00 | 22 – 12 |
| | 22 – 27 |
| 4TU–F3411–00 | 22 – 33 |
| 5WB–F3411–00 | 21 – 4 |
| 4KL–F3412–00 | 21 – 1 |
| 5WB–F3412–00 | 21 – 3 |
| 4S9–F3415–00 | 21 – 7 |
| 4S9–F3416–00 | 21 – 6 |
| 4S9–F3418–00 | 21 – 10 |
| 5WG–F341E–00 | 21 – 2 |
| 5WG–F341E–10 | 21 – 5 |
| 4S9–F3461–00 | 21 – 17 |
| 4S9–F3472–00 | 21 – 27 |
| 4TU–F3479–00 | 22 – 11 |
| | 22 – 26 |
| 4S9–F4110–01 | 23 – 1 |
| 4S9–F411B–00 | 31 – 3 |
| | 31 – 6 |
| 4S9–F4141–00 | 23 – 16 |
| 4S9–F414G–10 | 23 – 2 |
| 4S9–F4188–01 | 23 – 17 |
| 4S9–F4311–00 | 23 – 6 |

| CODIGO Nº PART NO. | REF. Nº |
|---|---|
| 4S9–F4312–00 | 23 – 7 |
| 4S9–F4313–00 | 23 – 8 |
| 4S9–F4500–00 | 23 – 12 |
| 4S9–F4514–00 | 23 – 3 |
| 4S9–F4610–00 | 23 – 14 |
| 4S9–F4612–00 | 23 – 15 |
| 4S9–F4723–00 | 24 – 3 |
| 4S9–F4726–00 | 24 – 5 |
| 4S9–F4727–00 | 24 – 7 |
| 4S9–F4730–10 | 24 – 1 |
| 4S9–F473R–00 | 24 – 8 |
| 4S9–F473T–00 | 24 – 10 |
| 4S9–F4741–00 | 24 – 4 |
| 4S9–F4742–00 | 24 – 23 |
| 4S9–F4747–00 | 24 – 2 |
| 4S9–F4763–00 | 30 – 42 |
| 4S9–F4768–00 | 24 – 21 |
| 4S9–F4773–01 | 24 – 22 |
| 4S9–F4780–00 | 24 – 15 |
| 4S9–F478E–00 | 24 – 20 |
| 40B–F4875–10 | 24 – 25 |
| 4S9–F5160–00–33 | 25 – 1 |
| 4S9–F5181–00 | 25 – 8 |
| 40B–F5188–00 | 25 – 11 |
| 4S9–F5190–01 | 25 – 12 |
| 4S9–F5321–00–33 | 27 – 7 |
| 4S9–F5338–00–33 | 27 – 1 |
| 4S9–F533A–00 | 27 – 12 |
| 4S9–F5351–00 | 27 – 13 |
| 4S9–F5355–00 | 27 – 11 |
| 4S9–F5364–00 | 27 – 6 |
| 4S9–F5366–00–33 | 27 – 17 |
| 4S9–F5371–00 | 27 – 36 |
| 4S9–F5381–00 | 27 – 27 |
| 4S9–F5383–00 | 27 – 30 |
| 4S9–F5389–00 | 27 – 32 |
| 4S9–F5412–00 | 27 – 22 |
| 4S9–F5435–20 | 27 – 21 |
| 4S9–F580U–00 | 26 – 4 |
| 4S9–F5827–00 | 26 – 15 |
| 40B–F582U–00 | 26 – 1 |
| 4S9–F583T–00 | 29 – 4 |
| 4S9–F5852–00 | 29 – 7 |
| 4S9–F5854–00 | 29 – 6 |
| 4S9–F5855–00 | 29 – 10 |
| 4S9–F5867–00 | 29 – 9 |
| 3D9–F586F–00 | 29 – 12 |
| 4S9–F5872–00 | 29 – 1 |

INDICE NUMERICO
NUMERICAL INDEX


| CODIGO Nº PART NO. | REF. Nº |
|---|---|
| 4S9–F5875–00 | 21 – 23 |
| 4S9–F5886–00 | 21 – 22 |
| 4S9–F5887–00 | 21 – 20 |
| 3D9–F589F–00 | 29 – 13 |
| 4KL–F589H–00 | 29 – 8 |
| 4S5–F5917–00 | 26 – 7 |
| 4S5–F5919–00 | 26 – 12 |
| 4S5–F5924–00 | 26 – 13 |
| 4S5–F5925–00 | 26 – 11 |
| 4S5–F5937–00 | 26 – 8 |
| 4S5–F5939–00 | 26 – 14 |
| 4S9–F6113–00 | 28 – 4 |
| 4S9–F6113–10 | 36 – 7 |
| 4S9–F6113–20 | 28 – 7 |
| 4S9–F6143–01–P0 | 28 – 5 |
| 4S9–F6143–01–P2 | 28 – 5 |
| 4S9–F6143–01–P3 | 28 – 5 |
| 4S9–F6145–00 | 28 – 8 |
| 4S9–F6210–00 | 28 – 1 |
| 4S9–F6240–00 | 28 – 11 |
| 4S9–F6241–00 | 28 – 12 |
| 40B–F6280–00 | 28 – 13 |
| 40B–F6290–00 | 28 – 14 |
| 4S9–F6311–00 | 28 – 15 |
| 4S9–F6331–00 | 28 – 18 |
| 4S9–F6393–00 | 28 – 16 |
| 4S9–F7111–01 | 30 – 1 |
| 4S9–F7112–00 | 30 – 2 |
| 4S9–F7115–00 | 30 – 4 |
| 4S9–F7211–00 | 30 – 6 |
| 4S9–F7231–00 | 30 – 9 |
| 4S9–F7235–00 | 30 – 8 |
| 4S9–F7311–00 | 30 – 15 |
| 4S9–F7411–00 | 30 – 19 |
| 4S9–F7413–00 | 30 – 21 |
| 4S9–F7424–00 | 30 – 38 |
| 4S9–F7430–00 | 30 – 22 |
| 4S9–F7431–00 | 30 – 24 |
| 4S9–F7433–00 | 30 – 25 |
| 4S9–F7440–00 | 30 – 30 |
| 4S9–F7441–00 | 30 – 32 |
| 4S9–F7444–00 | 30 – 33 |
| 4S9–F7445–00 | 30 – 26 |
| | 30 – 34 |
| 4S9–F7452–00–WN | 30 – 23 |
| 4S9–F7462–00–WN | 30 – 31 |
| 4S9–F8100–00 | 24 – 26 |
| 4S9–F8321–00 | 31 – 7 |

| CODIGO Nº PART NO. | REF. Nº |
|---|---|
| 4S9–F8322–00 | 31 – 8 |
| 4S9–F8371–00 | 18 – 8 |
| | 31 – 23 |
| 4S9–F8391–30 | 31 – 2 |
| 4S9–F8391–40 | 31 – 2 |
| 4S9–F8391–50 | 31 – 2 |
| 4S9–F8392–30 | 31 – 5 |
| 4S9–F8392–40 | 31 – 5 |
| 4S9–F8392–50 | 31 – 5 |
| 4S9–F8398–30 | 31 – 14 |
| 4S9–F8398–40 | 31 – 14 |
| 4S9–F8398–50 | 31 – 14 |
| 4S9–F8399–30 | 31 – 19 |
| 4S9–F8399–40 | 31 – 19 |
| 4S9–F8399–50 | 31 – 19 |
| 4S9–F842M–00 | 31 – 24 |
| 4S9–F842N–00 | 31 – 27 |
| 40B–H1410–00 | 32 – 2 |
| 4S9–H1450–00 | 32 – 1 |
| 4S9–H1800–00 | 33 – 1 |
| 4S9–H1801–00 | 33 – 2 |
| 5WV–H1828–00 | 33 – 6 |
| 4S9–H1834–00 | 33 – 3 |
| 4S9–H183G–00 | 33 – 5 |
| 4S9–H1940–00 | 40 – 8 |
| 4S9–H1960–00 | 40 – 6 |
| 40B–H2110–00 | 39 – 4 |
| 4S9–H2115–00 | 39 – 5 |
| 4S9–H2116–00 | 39 – 7 |
| 4S9–H2151–00 | 39 – 6 |
| 4S9–H2176–00 | 39 – 8 |
| 4S9–H2310–00 | 39 – 1 |
| 4S9–H2370–10 | 39 – 3 |
| 4S9–H2501–01 | 39 – 10 |
| 4S9–H2530–01 | 39 – 14 |
| 4S9–H2540–00 | 40 – 3 |
| 40B–H2590–01 | 39 – 15 |
| 4S9–H3311–00 | 36 – 3 |
| 3D9–H3311–10 | 34 – 2 |
| | 34 – 6 |
| 3D9–H3318–10 | 34 – 9 |
| 4S9–H3330–00 | 34 – 1 |
| 3D9–H3333–10 | 34 – 4 |
| | 34 – 8 |
| 3D9–H333A–00 | 34 – 7 |
| 4S9–H3340–00 | 34 – 5 |
| 3D9–H334A–00 | 34 – 3 |
| 4S9–H3350–00 | 40 – 9 |

| CODIGO Nº PART NO. | REF. Nº |
|---|---|
| 5WB–H3371–01 | 40 – 10 |
| 4S9–H3509–00 | 35 – 6 |
| 4S9–H3510–00 | 35 – 1 |
| 4S9–H3511–00 | 35 – 2 |
| 4S9–H3517–00 | 35 – 7 |
| 4S9–H3517–10 | 35 – 8 |
| 4S9–H3518–00 | 35 – 9 |
| 4S9–H353F–00 | 35 – 3 |
| 4S9–H3550–00 | 35 – 11 |
| 4S9–H3922–00 | 29 – 11 |
| 4S9–H3936–00 | 18 – 19 |
| | 28 – 19 |
| 4S9–H3941–00 | 38 – 2 |
| 4S9–H3973–00 | 38 – 1 |
| 40B–H3976–00 | 38 – 8 |
| 4S9–H397X–00 | 38 – 4 |
| 4S9–H3980–01 | 29 – 15 |
| 4S9–H4300–10 | 36 – 1 |
| 4S9–H4314–00 | 36 – 2 |
| 4S9–H4347–00 | 36 – 4 |
| 4S9–H4374–00 | 36 – 6 |
| 4S9–H4702–00 | 37 – 14 |
| 40B–H4710–00 | 37 – 1 |
| 4S9–H4712–00 | 37 – 5 |
| 4S9–H4714–00 | 37 – 2 |
| 40B–H4716–00 | 37 – 3 |
| 4S9–H4721–00 | 37 – 4 |
| 4S9–H4723–00 | 37 – 6 |
| 40B–H4740–00 | 37 – 16 |
| 40B–H4744–00 | 37 – 17 |
| 40B–H4763–00 | 37 – 8 |
| 4S9–H5110–00 | 22 – 6 |
| | 22 – 21 |
| 4P7–H5130–01 | 18 – 17 |
| 4S9–H5540–00 | 40 – 1 |
| 4S9–H5546–00 | 40 – 2 |
| 4S9–H5752–00 | 40 – 12 |
| 4S9–H5753–00 | 40 – 14 |
| 4S9–H5757–00 | 40 – 13 |
| 4S9–W0041–00 | 29 – 5 |
| 4S5–W0045–00 | 26 – 10 |
| 4S5–W0047–00 | 26 – 6 |
| 4S5–W0048–00 | 26 – 9 |
| 4S5–W0057–00 | 26 – 5 |
| 4S9–WE140–00 | 2 – 1 |
| 4S9–WF470–00 | 24 – 18 |
| 4S9–WF530–00 | 27 – 8 |
| 4S9–XF171–00–P0 | 19 – 16 |

| CODIGO Nº PART NO. | REF. Nº |
|---|---|
| 4S9–XF171–10–P0 | 19 – 16 |
| 4S9–XF173–10–P0 | 19 – 3 |
| 4S9–XF173–10–P1 | 19 – 3 |
| 4S9–XF173–10–P3 | 19 – 3 |
| 4S9–XF174–10–P0 | 19 – 9 |
| 4S9–XF174–10–P1 | 19 – 9 |
| 4S9–XF174–10–P3 | 19 – 9 |
| 40B–XF339–40–P0 | 21 – 13 |
| 40B–XF339–50–P1 | 21 – 13 |
| 4S9–XF831–10–P0 | 31 – 1 |
| 4S9–XF831–10–P1 | 31 – 1 |
| 4S9–XF831–10–P3 | 31 – 1 |
| 4S9–XF832–30–P0 | 31 – 4 |
| 4S9–XF832–30–P1 | 31 – 4 |
| 4S9–XF832–30–P3 | 31 – 4 |
| 4S9–XF838–10–P0 | 31 – 13 |
| 4S9–XF838–10–P1 | 31 – 13 |
| 4S9–XF838–10–P3 | 31 – 13 |
| 4S9–XF839–10–P0 | 31 – 18 |
| 4S9–XF839–10–P1 | 31 – 18 |
| 4S9–XF839–10–P3 | 31 – 18 |
| 4S9–XH254–01 | 39 – 11 |
| 90101–06278 | 27 – 14 |
| 90101–08820 | 4 – 8 |
| 90101–08847 | 27 – 23 |
| 90105–10036 | 21 – 18 |
| 90105–10813 | 20 – 16 |
| 90105–10824 | 26 – 3 |
| 90105–12802 | 20 – 15 |
| 90109–08183 | 27 – 37 |
| 90109–08368 | 27 – 41 |
| 90109–08830 | 30 – 16 |
| 90111–08807 | 26 – 2 |
| 90116–06805 | 1 – 4 |
| 90116–08824 | 9 – 14 |
| 90119–05004 | 36 – 5 |
| 90119–05071 | 40 – 15 |
| 90119–05827 | 13 – 19 |
| 90119–06205 | 18 – 13 |
| 90119–06869 | 18 – 10 |
| 90149–06811 | 39 – 12 |
| 90155–06801 | 5 – 5 |
| 90159–03102 | 35 – 5 |
| 90159–06033 | 24 – 19 |
| 90159–06817 | 19 – 18 |
| | 21 – 15 |
| | 31 – 16 |
| | 31 – 21 |

| CODIGO Nº PART NO. | REF. Nº |
|---|---|
| 90159–06817 | 31 – 25 |
| 90167–04021 | 35 – 4 |
| 90170–05302 | 3 – 10 |
| 90170–06184 | 27 – 34 |
| 90176–08807 | 1 – 11 |
| 90179–06411 | 30 – 12 |
| 90179–08639 | 27 – 24 |
| 90179–12803 | 13 – 11 |
| 90179–14803 | 13 – 25 |
| 90179–25809 | 21 – 8 |
| 90183–05807 | 18 – 6 |
| | 19 – 13 |
| | 21 – 28 |
| | 24 – 9 |
| | 28 – 6 |
| | 31 – 15 |
| | 31 – 20 |
| | 37 – 12 |
| 90185–08818 | 30 – 17 |
| 90185–10807 | 25 – 9 |
| 90185–12804 | 27 – 28 |
| 90201–05812 | 37 – 22 |
| 90201–06071 | 37 – 10 |
| 90201–064K6 | 23 – 5 |
| 90201–06557 | 8 – 5 |
| | 31 – 11 |
| 90201–07808 | 39 – 13 |
| 90201–083A8 | 8 – 11 |
| 90201–08612 | 8 – 8 |
| | 28 – 3 |
| 90201–086P8 | 17 – 3 |
| 90201–08824 | 4 – 7 |
| 90201–08827 | 1 – 10 |
| 90201–101J1 | 20 – 17 |
| | 25 – 10 |
| 90201–10669 | 8 – 16 |
| 90201–108J9 | 29 – 3 |
| 90201–12190 | 20 – 6 |
| 90201–122H1 | 32 – 6 |
| 90201–126A7 | 16 – 18 |
| 90201–127F4 | 16 – 14 |
| 90201–12820 | 13 – 10 |
| 90201–12826 | 27 – 29 |
| 90201–128C9 | 14 – 7 |
| 90201–128D0 | 20 – 5 |
| 90201–15700 | 14 – 17 |
| 90201–167P7 | 13 – 5 |
| 90201–178D3 | 16 – 11 |

| CODIGO Nº PART NO. | REF. Nº |
|---|---|
| 90201–20266 | 14 – 4 |
| | 14 – 11 |
| 90202–26803 | 21 – 9 |
| 90206–14093 | 27 – 16 |
| 90206–19027 | 11 – 5 |
| 90209–10131 | 38 – 3 |
| 90240–08140 | 30 – 27 |
| | 30 – 35 |
| 90249–12008 | 30 – 11 |
| 90280–03017 | 2 – 7 |
| 90340–12806 | 5 – 6 |
| 90340–14818 | 10 – 7 |
| 90340–32813 | 10 – 9 |
| 90387–05003 | 37 – 20 |
| 90387–06063 | 10 – 15 |
| 90387–062M9 | 21 – 16 |
| 90387–06681 | 18 – 3 |
| | 21 – 12 |
| 90387–06737 | 6 – 17 |
| 90387–067W9 | 24 – 13 |
| 90387–06814 | 31 – 9 |
| 90387–06898 | 19 – 8 |
| | 19 – 15 |
| 90387–068E9 | 31 – 26 |
| 90387–10277 | 25 – 7 |
| 90387–10817 | 8 – 10 |
| | 30 – 39 |
| 90387–127Y0 | 27 – 19 |
| 90387–12841 | 27 – 31 |
| 90387–12844 | 27 – 2 |
| 90387–15812 | 14 – 16 |
| 90387–16812 | 13 – 1 |
| 90387–17805 | 13 – 23 |
| 90401–10812 | 29 – 2 |
| 90430–06817 | 4 – 15 |
| 90430–12227 | 5 – 7 |
| 90460–43053 | 6 – 16 |
| 90462–10801 | 9 – 12 |
| 90464–45800 | 28 – 20 |
| 90465–10833 | 9 – 11 |
| 90467–07029 | 7 – 32 |
| 90467–08801 | 8 – 24 |
| 90467–09006 | 23 – 10 |
| 90467–10803 | 23 – 9 |
| 90467–11106 | 6 – 15 |
| 90467–11801 | 23 – 11 |
| 90467–13064 | 9 – 5 |
| 90467–13800 | 6 – 19 |

INDICE NUMERICO
NUMERICAL INDEX

| CODIGO Nº PART NO. | REF. Nº |
|---|---|
| 90467–13814 | 8 – 27 |
| | 8 – 31 |
| 90467–15012 | 8 – 26 |
| 90467–16800 | 8 – 20 |
| 90468–26800 | 11 – 3 |
| 90480–01559 | 18 – 11 |
| 90480–11008 | 37 – 21 |
| 90480–12808 | 19 – 7 |
| | 19 – 14 |
| 90480–13005 | 37 – 9 |
| 90480–13018 | 31 – 10 |
| 90480–13568 | 10 – 14 |
| 90480–14806 | 24 – 12 |
| 90480–18895 | 37 – 13 |
| 90501–02639 | 12 – 8 |
| 90501–04802 | 13 – 9 |
| 90501–050F1 | 13 – 22 |
| 90501–06805 | 15 – 6 |
| 90501–10245 | 30 – 10 |
| 90501–12805 | 16 – 17 |
| 90501–203G2 | 13 – 18 |
| 90506–12801 | 27 – 9 |
| 90506–15802 | 27 – 10 |
| 90506–20810 | 30 – 7 |
| 90506–20829 | 30 – 18 |
| 90506–35815 | 30 – 5 |
| 90508–26810 | 11 – 8 |
| 90508–29007 | 16 – 7 |
| 90520–02801 | 17 – 12 |
| 90520–02802 | 17 – 13 |
| 90520–05804 | 18 – 20 |
| 90560–10292 | 25 – 2 |
| 90560–17384 | 13 – 12 |
| 91317–06012 | 4 – 5 |
| | 12 – 9 |
| 91317–06014 | 32 – 4 |
| 91317–06016 | 4 – 12 |
| 91317–06018 | 4 – 16 |
| 91317–06025 | 6 – 4 |
| | 6 – 5 |
| | 29 – 14 |
| | 32 – 3 |
| 91401–20012 | 27 – 40 |
| | 30 – 13 |
| 91401–25015 | 30 – 28 |
| | 30 – 36 |
| 91401–30030 | 30 – 3 |
| 92907–04100 | 7 – 11 |

| CODIGO Nº PART NO. | REF. Nº |
|---|---|
| 92907–04100 | 7 – 24 |
| 92907–05200 | 18 – 16 |
| 92907–06200 | 38 – 6 |
| 92907–06600 | 30 – 14 |
| 92907–08200 | 27 – 38 |
| 92907–10200 | 8 – 14 |
| 92B17–06025 | 15 – 3 |
| 93101–10800 | 10 – 24 |
| 93102–12806 | 16 – 6 |
| 93102–15807 | 11 – 13 |
| 93102–20802 | 14 – 21 |
| 93106–20808 | 25 – 3 |
| 93106–26823 | 27 – 18 |
| 93210–06806 | 16 – 22 |
| 93210–108B1 | 4 – 2 |
| 93210–14899 | 10 – 8 |
| 93210–19809 | 10 – 23 |
| 93210–22806 | 40 – 4 |
| 93210–23614 | 33 – 4 |
| 93210–25809 | 6 – 3 |
| 93210–328A4 | 10 – 10 |
| 93210–41041 | 27 – 5 |
| 93210–44807 | 1 – 9 |
| 93210–62802 | 1 – 6 |
| 93306–001X8 | 14 – 9 |
| 93306–002X9 | 4 – 3 |
| 93306–054Y0 | 27 – 20 |
| 93306–203XE | 14 – 8 |
| 93306–204XF | 14 – 20 |
| 93306–205YP | 2 – 6 |
| 93306–252XJ | 14 – 19 |
| 93306–300Y4 | 25 – 4 |
| 93306–301XG | 27 – 3 |
| 93306–301XH | 27 – 4 |
| 93310–526Y6 | 2 – 3 |
| 93340–212Y6 | 16 – 15 |
| 93342–210Y0 | 13 – 28 |
| 93410–20809 | 14 – 5 |
| | 14 – 12 |
| | 14 – 23 |
| 93430–05826 | 5 – 3 |
| 93440–10153 | 1 – 3 |
| 93450–14088 | 2 – 10 |
| 93604–10837 | 16 – 16 |
| 93604–12831 | 15 – 4 |
| 93606–10801 | 13 – 8 |
| 93608–43800 | 12 – 2 |
| 93608–50149 | 16 – 8 |

| CODIGO Nº PART NO. | REF. Nº |
|---|---|
| 93610–10174 | 12 – 7 |
| 93822–15817 | 14 – 22 |
| 94107–17842 | 25 – 5 |
| 94108–17841 | 27 – 25 |
| 94207–17808 | 25 – 6 |
| | 27 – 26 |
| 94568–B7098 | 27 – 35 |
| 94568–D2086 | 4 – 9 |
| 94700–00875 | 1 – 12 |
| 95027–06010 | 21 – 21 |
| | 21 – 24 |
| 95027–06014 | 40 – 7 |
| 95027–06016 | 21 – 11 |
| 95027–06025 | 21 – 26 |
| | 24 – 14 |
| 95027–06040 | 9 – 10 |
| | 10 – 4 |
| | 10 – 20 |
| 95027–06050 | 10 – 5 |
| | 10 – 21 |
| 95027–06060 | 9 – 9 |
| 95027–06080 | 9 – 8 |
| | 10 – 6 |
| 95027–06090 | 1 – 15 |
| 95304–08700 | 27 – 39 |
| 95307–06600 | 27 – 15 |
| | 27 – 33 |
| 95604–12200 | 20 – 7 |
| 95607–05100 | 37 – 19 |
| 95607–08200 | 17 – 4 |
| 95607–10200 | 21 – 19 |
| 95707–05500 | 18 – 18 |
| 95707–06500 | 8 – 18 |
| | 16 – 23 |
| | 24 – 6 |
| 95707–08500 | 8 – 12 |
| 95707–10500 | 8 – 15 |
| 95707–12500 | 32 – 5 |
| 95807–06010 | 17 – 9 |
| | 40 – 11 |
| 95807–06012 | 8 – 22 |
| | 37 – 15 |
| 95807–06014 | 23 – 13 |
| 95807–06020 | 6 – 18 |
| | 24 – 24 |
| 95807–06025 | 10 – 13 |
| 95807–08045 | 8 – 7 |
| 95817–08020 | 30 – 29 |

| CODIGO Nº PART NO. | REF. Nº |
|---|---|
| 95817–08020 | 30 – 37 |
| 95817–08120 | 17 – 2 |
| 95827–06016 | 23 – 4 |
| 95827–08016 | 30 – 20 |
| | 30 – 41 |
| 95827–10045 | 8 – 13 |
| 97007–05012 | 18 – 15 |
| 97007–06016 | 39 – 2 |
| 97007–06020 | 31 – 12 |
| 97007–08016 | 28 – 2 |
| 97017–06025 | 11 – 12 |
| 97027–08020 | 16 – 26 |
| 97502–06510 | 20 – 11 |
| 97527–06510 | 39 – 9 |
| 97527–06520 | 18 – 4 |
| 97702–40120 | 37 – 7 |
| 97707–50012 | 21 – 14 |
| | 28 – 10 |
| | 31 – 17 |
| | 31 – 22 |
| 97707–50014 | 18 – 7 |
| | 19 – 2 |
| | 37 – 11 |
| 97707–50016 | 8 – 29 |
| | 24 – 11 |
| | 28 – 9 |
| | 31 – 28 |
| | 35 – 10 |
| 97707–50025 | 19 – 6 |
| | 19 – 12 |
| 9770M–50030 | 6 – 13 |
| 98507–04012 | 7 – 10 |
| 98507–04014 | 7 – 23 |
| 98507–05010 | 40 – 5 |
| 98507–05012 | 28 – 17 |
| 98507–05020 | 37 – 18 |
| 98507–06012 | 24 – 16 |
| 98507–06016 | 1 – 7 |
| 9850M–05025 | 38 – 7 |
| | 38 – 9 |
| 9850M–06008 | 38 – 5 |
| 9890N–05008 | 33 – 7 |
| 98980–06012 | 8 – 3 |
| 99009–10400 | 15 – 11 |
| 99009–15400 | 14 – 18 |
| 99009–17400 | 16 – 12 |
| 99009–19400 | 11 – 7 |
| 99246–00100 | 19 – 5 |

| CODIGO Nº PART NO. | REF. Nº |
|---|---|
| 99246–00100 | 19 – 11 |
| 99530–10114 | 1 – 14 |
| | 9 – 7 |
| | 9 – 13 |
| | 10 – 3 |
| | 10 – 19 |

| CODIGO Nº PART NO. | REF. Nº |
|---|---|