YAMAHA

PARTS CATALOGUE

T135HC (55C5) MALAYSIA

1N55C-440EA

( )

YAMAHA GENUINE Parts & Accessories

T135HC
PARTS CATALOGUE
©2013 by Yamaha Motor Co., Ltd.
1st edition, September 2013
All rights reserved.
Any reprinting or unauthorized use
without the written permission of
Yamaha Motor Co., Ltd.
is expressly prohibited.
Printed in Japan.

FOREWORD

This Parts Catalogue is related to the parts for the model(s) on the cover page. When you are ordering replacement parts, please refer to this Parts Catalogue and quote both part numbers and part names correctly.

1. Modifications or additions which have been made after the issue of the Parts Catalogue will be announced in the Parts News.
   It is advisable that you make the necessary corrections to the Parts Catalogue according to the Parts News.

2. Abbreviations
   The following abbreviations are used in this Parts Catalogue.

   “UR” Use specified parts number.
   “UN” Use as many as needed.
   “AP” Alternate Parts
   “LM” Locally Made (Parts need to be ordered locally)
   “F#” Frame No. (Applicable machine No.)
   “O/S” Over Size

3. The number of components for assembly
   - Parts, which are to be supplied in an assembly, are listed with a dot (.) in front of the part name as shown below.
   - The numeral appearing to the right of each component part indicates the quantity of parts for each assembly unit.

PART NO.	DESCRIPTION	Q’TY	REMARKS
2F5–83310–60	FRONT FLASHER LIGHT ASSY	2	
115–83311–60	.BULB (6V–18W)	1	

4. Applicable colours of graphics are represented in the “REMARKS” as shown below.

PART NO.	DESCRIPTION	Q’TY	REMARKS
2N4–24110–00–X5	FUEL TANK COMP.	2	MXR
3J1–24240–10	.GRAPHIC, FUEL TANK	1	FOR MXR

5. Note that the illustrations for reference in finding parts numbers are not to be used for assembling. When assembling, please use the applicable service manual.

6. The asterisk (*) before a reference number indicates modified items after the first edition.

7. Applicable Serial No.

Frame Serial No.

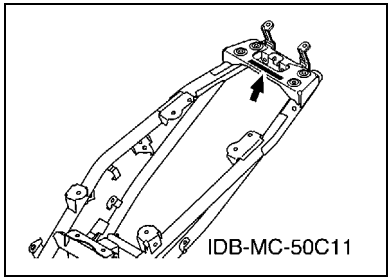

Engine Serial No.

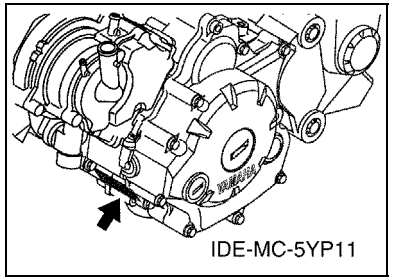

8. Applicable Colour Code (The (*) mark shows Model colour.)

Abbreviation	Colour Name	Colour Code
BMC	BLUE METALLIC C	0775
DBNM9(*)	DARK BLUISH GRAY METALLIC 9	1240
MBL2	MAT BLACK 2	0582
S3(*)	SILVER 3	0791
SMX(*)	BLACK METALLIC X	0903
YB	YAMAHA BLACK	0033

9. Applicable Starting Serial No.

Frame Serial No.

Serial No.	Name Of Q'ty Column	Model Code

Engine Serial No.

Serial No.	Name Of Q'ty Column	Model Code

CONTENTS

ENGINE

CYLINDER HEAD 1
CRANKSHAFT & PISTON 2
VALVE 3
CAMSHAFT & CHAIN 4
WATER PUMP 5
RADIATOR & HOSE 6
OIL PUMP 7
INTAKE 8
CARBURETOR 10
EXHAUST 12
CRANKCASE 13
CRANKCASE COVER 1 14
STARTER 15
STARTER CLUTCH 16
CLUTCH 17
TRANSMISSION 18
SHIFT CAM & FORK 20
SHIFT SHAFT 21

CHASSIS

FRAME 22
FENDER 23
SIDE COVER 24
REAR ARM & SUSPENSION 26
STEERING 27
FRONT FORK 28
FUEL TANK 29
SEAT 30
FRONT WHEEL 31
FRONT BRAKE CALIPER 32
REAR WHEEL 33
REAR BRAKE CALIPER 35
STEERING HANDLE & CABLE 36
FRONT MASTER CYLINDER 38
STAND & FOOTREST 39
REAR MASTER CYLINDER 41
LEG SHIELD 43
GENERATOR 46
STARTING MOTOR 47
FLASHER LIGHT 48
METER 49
HEADLIGHT 50
TAILLIGHT 51
HANDLE SWITCH & LEVER 52
ELECTRICAL 1 53
ELECTRICAL 2 54

INDEX

NUMERICAL INDEX 55

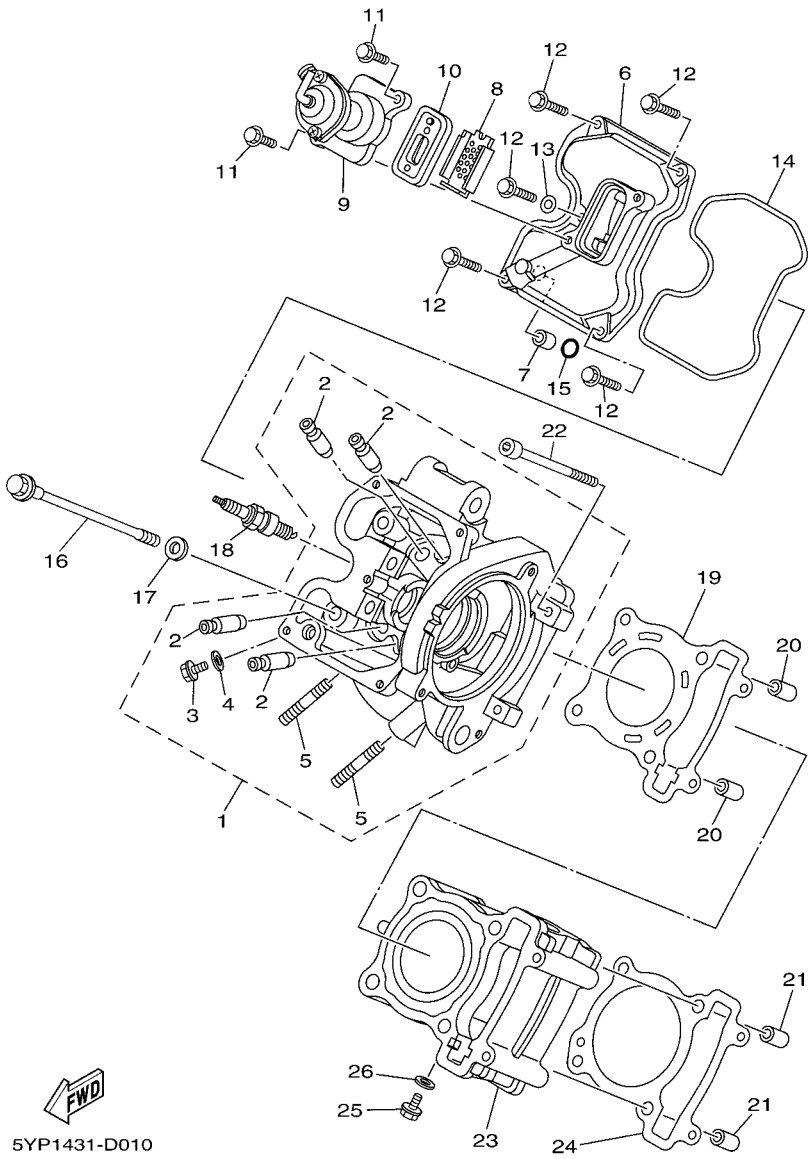

FIG. 1 CYLINDER HEAD

REF. NO.	PART NO.	DESCRIPTION	55C5					REMARKS
1	21S–E1102–00	CYLINDER HEAD ASSY	1					
2	5YP–E1133–10	.GUIDE, VALVE 1	4					
3	90153–06803	.SCREW, HEXAGON	1					
4	90430–06817	.GASKET	1					
5	95617–08620	.BOLT, STUD	2					
6	1S8–E1191–00	COVER, CYLINDER HEAD 1	1					
7	91811–10005	PIN, DOWEL	1					
8	5YP–1482K–00	PLATE	1					
9	5YP–E4840–00	AIR CUT VALVE ASSY	1					
10	5YP–E4890–00	REED VALVE ASSY	1					
11	95027–06014	BOLT, FLANGE	2					
12	95027–06020	BOLT, FLANGE	5					
13	90430–06817	GASKET	1					
14	5YP–E1193–00	GASKET, HEAD COVER 1	1					
15	93210–11802	O-RING	1					
16	90105–08850	BOLT, FLANGE	4					
17	90201–08609	WASHER, PLATE	4					
18	94700–00884	PLUG, SPARK (NGK CPR8EA)	1					
19	1S8–E1181–01	GASKET, CYLINDER HEAD 1	1					
20	99530–10114	PIN, DOWEL	2					
21	99530–10114	PIN, DOWEL	2					
22	91317–06100	BOLT	2					
23	50C–E1311–00	CYLINDER 1	1					
24	55C–E1351–00	GASKET, CYLINDER	1					
25	90153–06803	SCREW, HEXAGON	1					
26	90430–06817	GASKET	1					

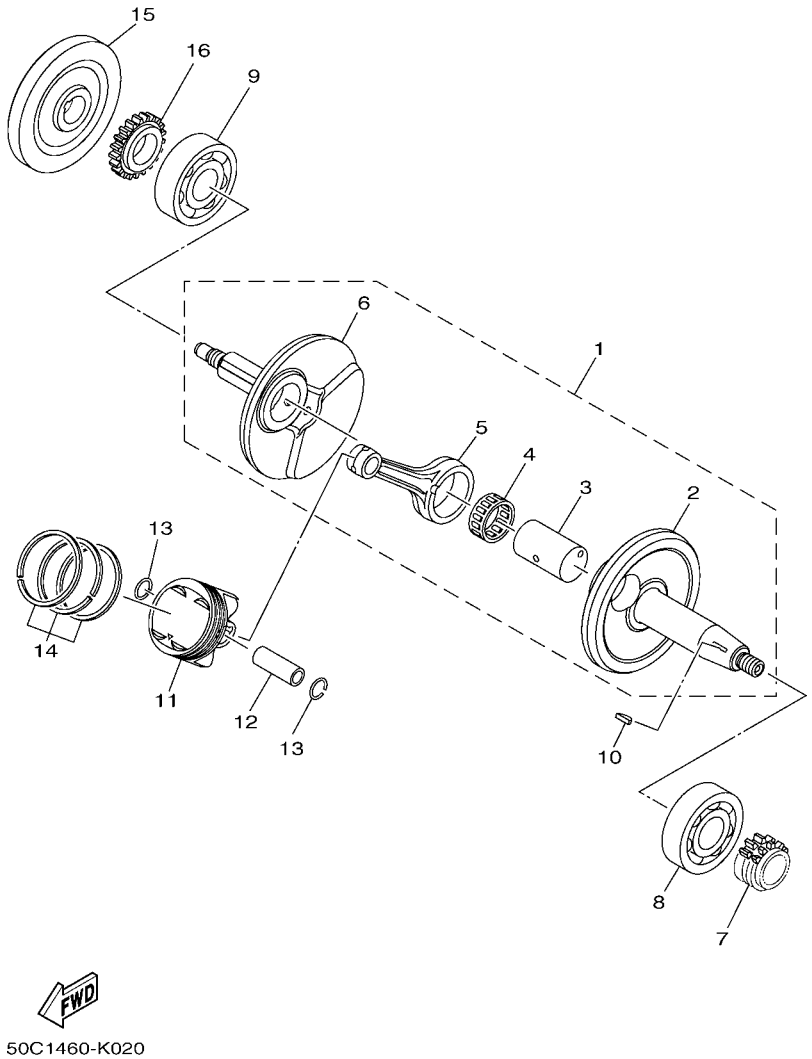

FIG. 2 CRANKSHAFT & PISTON

REF. NO.	PART NO.	DESCRIPTION	55C5					REMARKS
1	55C–E1400–00	CRANKSHAFT ASSY	1					
2	50C–E1412–00	.CRANK 1	1					
3	3C1–11681–10	.PIN, CRANK 1	1					
4	93310–528YD	.BEARING	1					
5	3C1–E1651–11	.ROD, CONNECTING	1					
6	50C–E1422–00	.CRANK 2	1					
7	3C1–E1549–00	SPROCKET, CAM CHAIN	1					
8	93306–305YL	BEARING	1					
9	93306–305X7	BEARING	1					
10	90280–03017	KEY, WOODRUFF	1					
11	50C–E1631–01	PISTON (STD)	1					
12	1S8–11633–01	PIN, PISTON	1					
13	93450–16115	CIRCLIP	2					
14	50C–E1603–00	PISTON RING SET (STD)	1					
15	50C–E1571–00	FLYWHEEL	1					
16	3C1–E3324–00	GEAR, PUMP DRIVE	1					

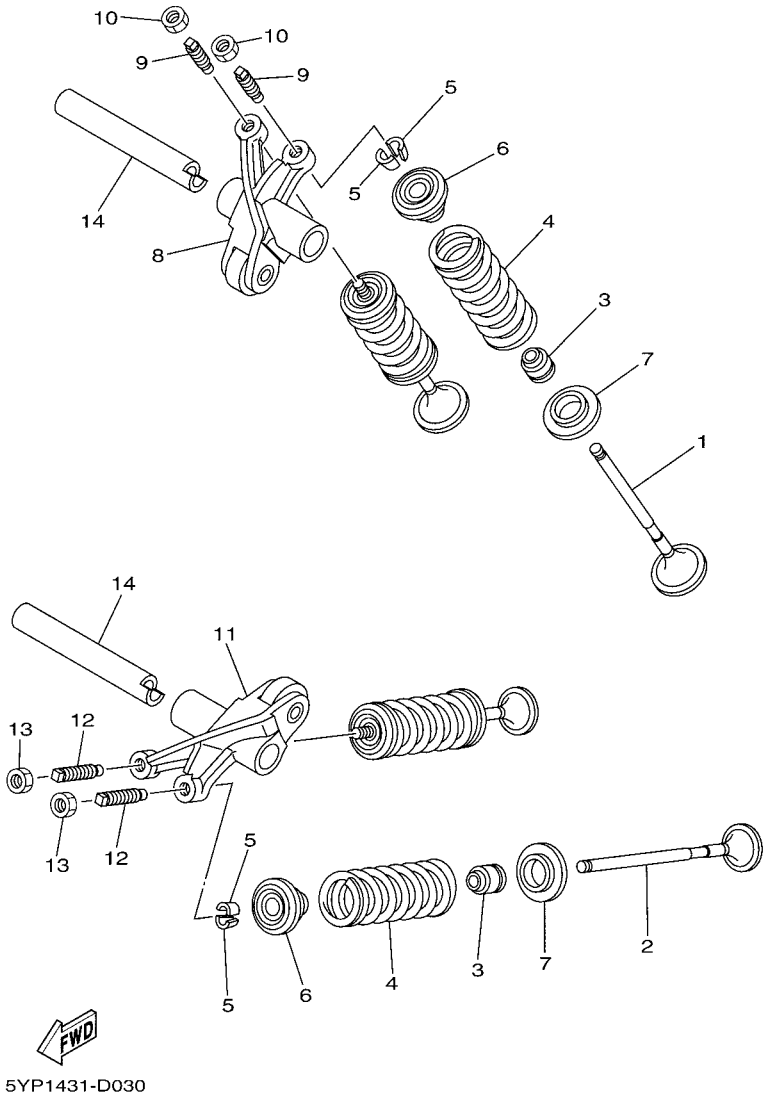

FIG. 3 VALVE

REF. NO.	PART NO.	DESCRIPTION	55C5					REMARKS
1	5YP–E2111–00	VALVE, INTAKE	2					
2	5YP–E2121–00	VALVE, EXHAUST	2					
3	5YP–E2119–00	SEAL, VALVE STEM	4					
4	5YP–E2113–00	SPRING, VALVE INNER	4					
5	1WG–12118–00	LOCK, VALVE SPRING RETAINER	8					
6	5YP–12117–00	RETAINER, VALVE SPRING	4					
7	5YP–E2126–00	SEAT, VALVE SPRING 2	4					
8	5YP–E2151–00	ARM, VALVE ROCKER	1					
9	5YP–E2159–00	SCREW, VALVE ADJUSTING	2					
10	90170–05302	NUT	2					
11	5YP–E2161–00	ARM, VALVE ROCKER 2	1					
12	5YP–E2159–00	SCREW, VALVE ADJUSTING	2					
13	90170–05302	NUT	2					
14	1S8–E2156–00	SHAFT, ROCKER 2	2					

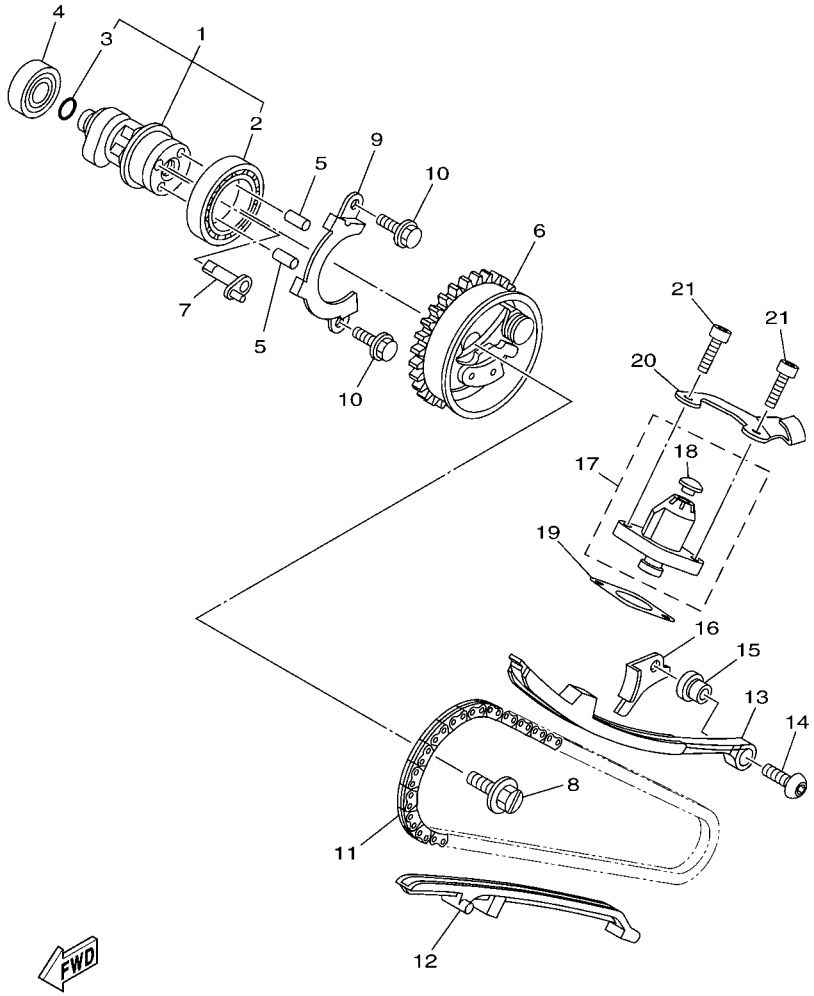

55C1440-K040

FIG. 4 CAMSHAFT & CHAIN

REF. NO.	PART NO.	DESCRIPTION	55C5					REMARKS
1	21S–E2170–01	CAMSHAFT ASSY 1	1					
2	93306–906Y0	.BEARING	1					
3	93210–09805	.O-RING	1					
4	93306–001X2	BEARING	1					
5	93605–06002	PIN, DOWEL	2					
6	1B9–E2280–02	DECOMPRESSION ASSY	1					
7	5YP–E2288–00	CAM, DECOMPRESSION	1					
8	5YP–E2157–00	BOLT	1					
9	1S8–E111F–00	PLATE	1					
10	95027–06010	BOLT, FLANGE	2					
11	94568–A8096	CHAIN	1					
12	1S8–E2231–00	GUIDE, STOPPER 1	1					
13	5YP–E2241–00	GUIDE, STOPPER 2	1					
14	90149–06829	SCREW	1					
15	3C1–E5598–00	COLLAR	1					
16	3C1–E2256–00	COVER, CHAIN	1					
17	5MX–E2210–00	TENSIONER ASSY, CAM CHAIN	1					
18	5MX–E2222–00	.PLUG	1					
19	1S8–E2213–01	GASKET, TENSIONER CASE	1					
20	50C–E5441–00	HOLDER, CLUTCH CABLE	1					
21	91317–06020	BOLT	2					

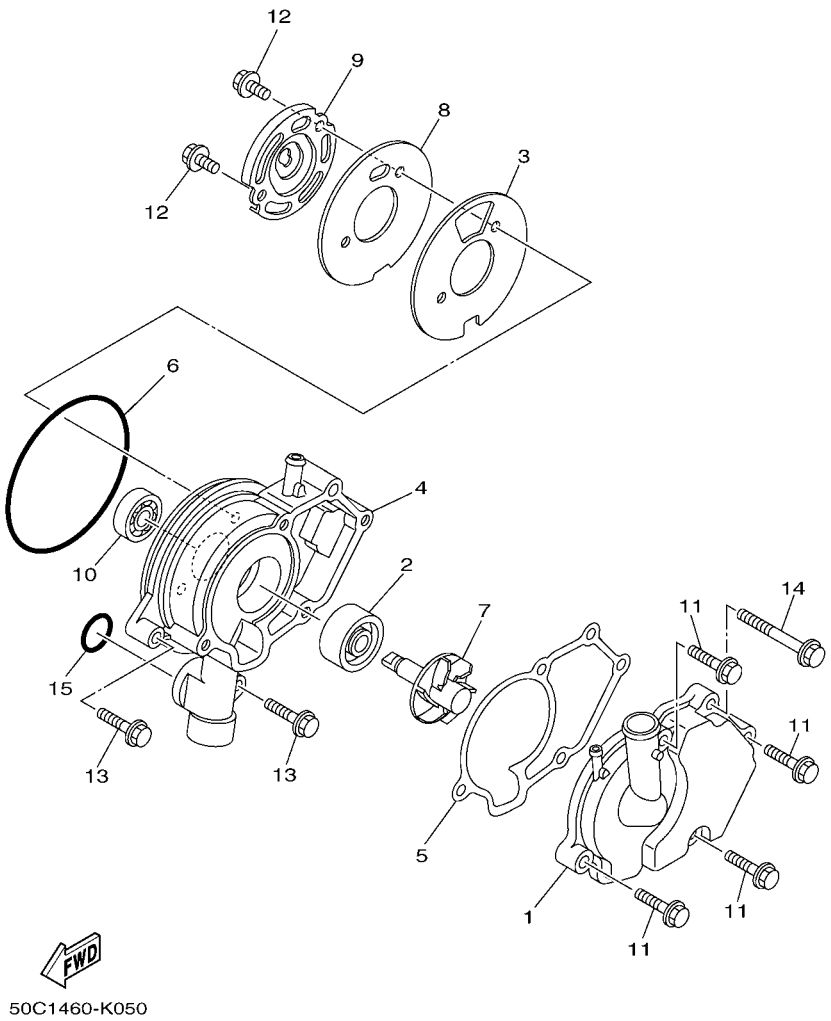

FIG. 5 WATER PUMP

REF. NO.	PART NO.	DESCRIPTION	55C5					REMARKS
1	1S7–E2422–00	COVER, HOUSING	1					
2	93103–10801	OIL SEAL	1					
3	50C–E2428–00	GASKET, HOUSING COVER 2	1					
4	1S7–E1185–01	COVER, CYLINDER HEAD SIDE 3	1					
5	1S7–E1196–00	GASKET, CYLINDER HEAD SIDE	1					
6	93210–84801	O-RING	1					
7	1S7–E2450–00	IMPELLER SHAFT ASSY	1					
8	50C–E1951–00	PLATE	1					
9	1S7–E1952–01	PLATE	1					
10	93306–000Y3	BEARING	1					
11	95027–06025	BOLT, FLANGE	4					
12	95027–06012	BOLT, FLANGE	2					
13	95027–06025	BOLT, FLANGE	2					
14	95027–06050	BOLT, FLANGE	1					
15	93210–19809	O-RING	1					

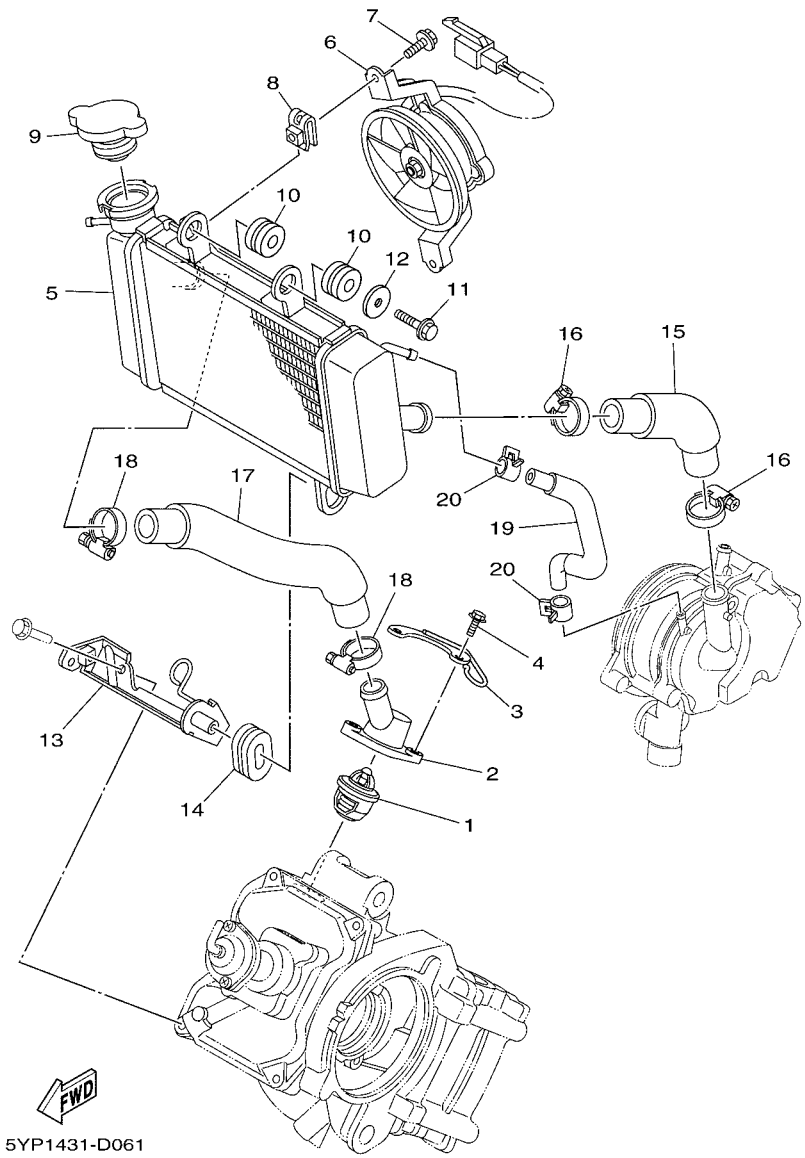

FIG. 6 RADIATOR & HOSE

REF. NO.	PART NO.	DESCRIPTION	55C5					REMARKS
1	5YP–12411–00	THERMOSTAT	1					
2	1S8–E2413–00	COVER, THERMOSTAT	1					
3	5YP–E2491–00	CLAMP 1	1					
4	90105–06848	BOLT, FLANGE	2					
5	5YP–E2461–00	RADIATOR COMP	1					
6	5YP–E2405–00	BLOWER ASSY	1					
7	5YP–E2675–00	BOLT, BLOWER HOLDING	2					
8	5YP–E2671–00	NUT 1	2					
9	5P0–E2590–00	CONDUCTION ASSY	1					
10	90480–15363	GROMMET	2					
11	95827–06016	BOLT, FLANGE	1					
12	90201–06069	WASHER, PLATE	1					
13	1S8–E2443–01	STAY	1					
14	90480–01803	GROMMET	1					
15	1S8–E2481–00	PIPE 1	1					
16	90450–27803	HOSE CLAMP ASSY	2					
17	1S8–E2482–00	PIPE 2	1					
18	90450–27803	HOSE CLAMP ASSY	2					
19	5YP–E2576–00	HOSE 1	1					
20	90467–10038	CLIP	2					

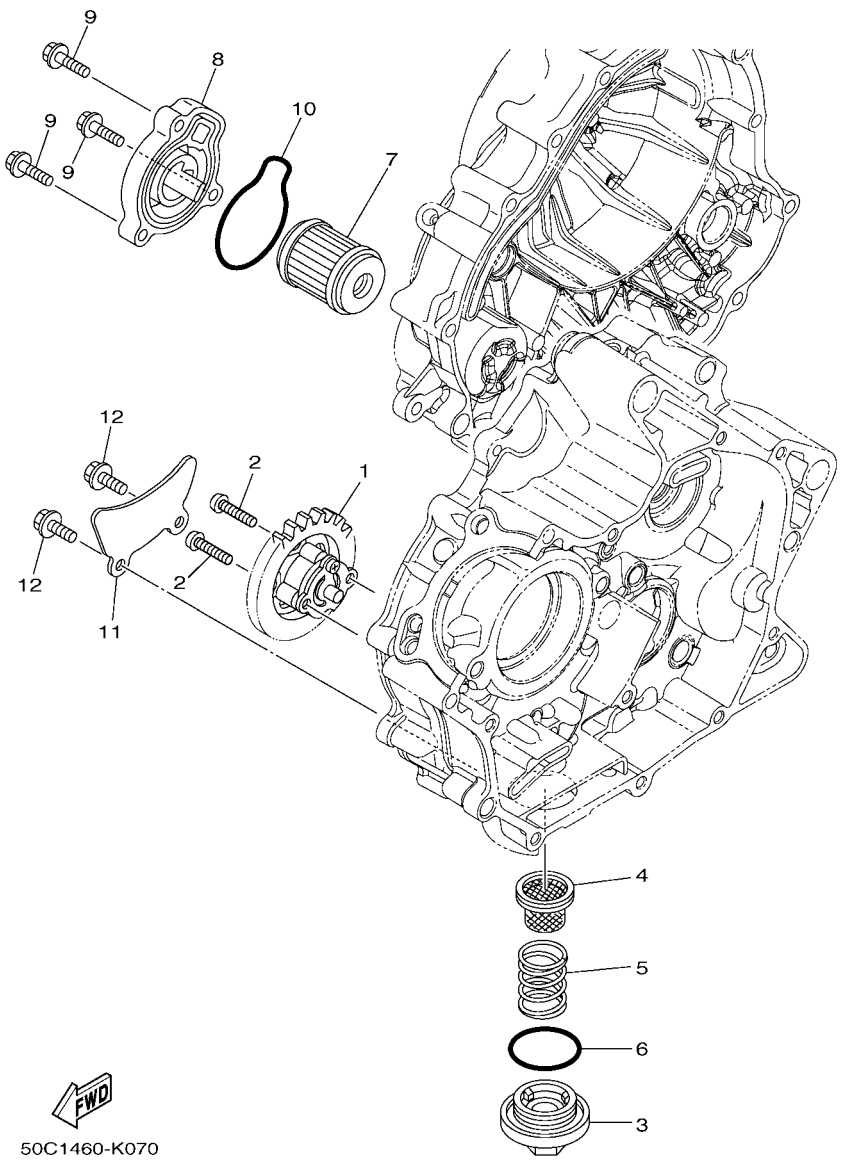

FIG. 7 OIL PUMP

REF. NO.	PART NO.	DESCRIPTION	55C5					REMARKS
1	3C1–E3300–00	OIL PUMP ASSY	1					
2	92017–05025	BOLT, BUTTON HEAD	2					
3	1S8–E5351–00	PLUG, DRAIN	1					
4	1S8–E3411–00	STRAINER, OIL	1					
5	90501–18576	SPRING, COMPRESSION	1					
6	93210–34801	O-RING	1					
7	5YP–E3440–00	ELEMENT ASSY, OIL CLEANER	1					
8	55C–E3447–00	COVER, OIL ELEMENT	1					
9	9502L–06020	BOLT, FLANGE	3					
10	93210–54805	O-RING	1					
11	3C1–E3327–00	COVER, PUMP GEAR	1					
12	9502L–06012	BOLT, FLANGE	2					

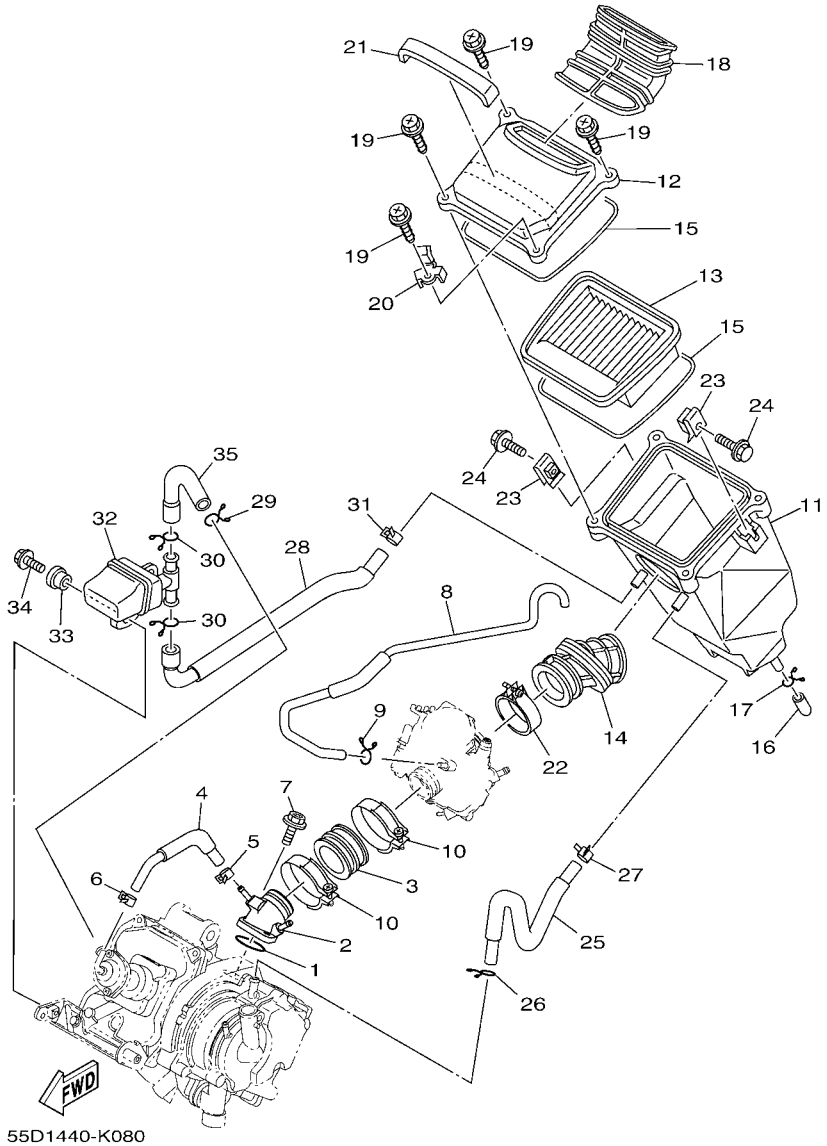

FIG. 8 INTAKE

REF. NO.	PART NO.	DESCRIPTION	55C5					REMARKS
1	93210–32807	O-RING	1					
2	50C–E3536–00	JT. , CARBURETOR	1					
3	50C–E3586–00	JOINT, CARBURETOR 1	1					
4	1S7–E3542–00	HOSE, VACUUM SENSING 1	1					
5	90467–08801	CLIP	1					
6	90467–08801	CLIP	1					
7	90105–06061	BOLT, FLANGE	2					
8	55C–E4197–00	PIPE	1					
9	90467–07029	CLIP	1					
10	5MX–E3474–01	BAND	2					
11	50C–E4411–00	CASE, AIR CLEANER 1	1					
12	1S7–E4412–00	CAP, CLEANER CASE 1	1					
13	1S7–E4450–00	ELEMENT ASSY, AIR CLEANER	1					
14	50C–E4453–00	JOINT, AIR CLEANER 1	1					
15	1S7–E4452–00	SEAL	2					
16	5TL–E443E–00	PIPE, DRAIN	1					
17	90467–12800	CLIP	1					
18	1S7–E4437–00	DUCT	1					
19	90163–05803	SCREW, TAPPING	4					
20	90462–08814	CLAMP	1					
21	1S7–E4425–00	DAMPER 1	1					
22	5MX–E3575–01	BAND	1					
23	90183–06023	NUT, SPRING	2					
24	90119–06051	BOLT, WITH WASHER	2					
25	50C–E1166–00	PIPE, BREATHER 1	1					
26	90467–13858	CLIP	1					
27	90467–13064	CLIP	1					

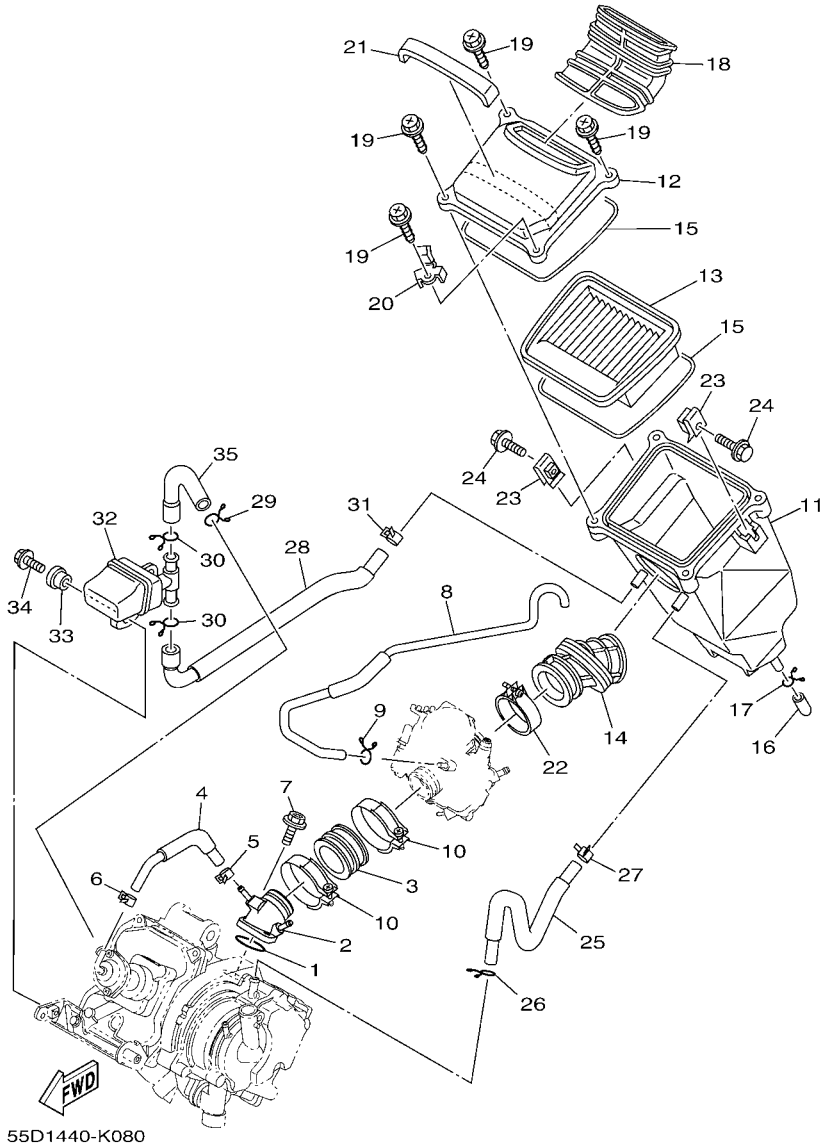

FIG. 8 INTAKE

REF. NO.	PART NO.	DESCRIPTION	55C5					REMARKS
28	55C–E4882–00	HOSE, BEND 2	1					
29	90467–15012	CLIP	1					
30	90467–15012	CLIP	2					
31	90467–14117	CLIP	1					
32	1S7–E4877–01	RESONATOR	1					
33	90387–068B0	COLLAR	1					
34	97027–06016	BOLT, HEXAGON	1					
35	5YP–E4881–00	HOSE, BEND 1	1					

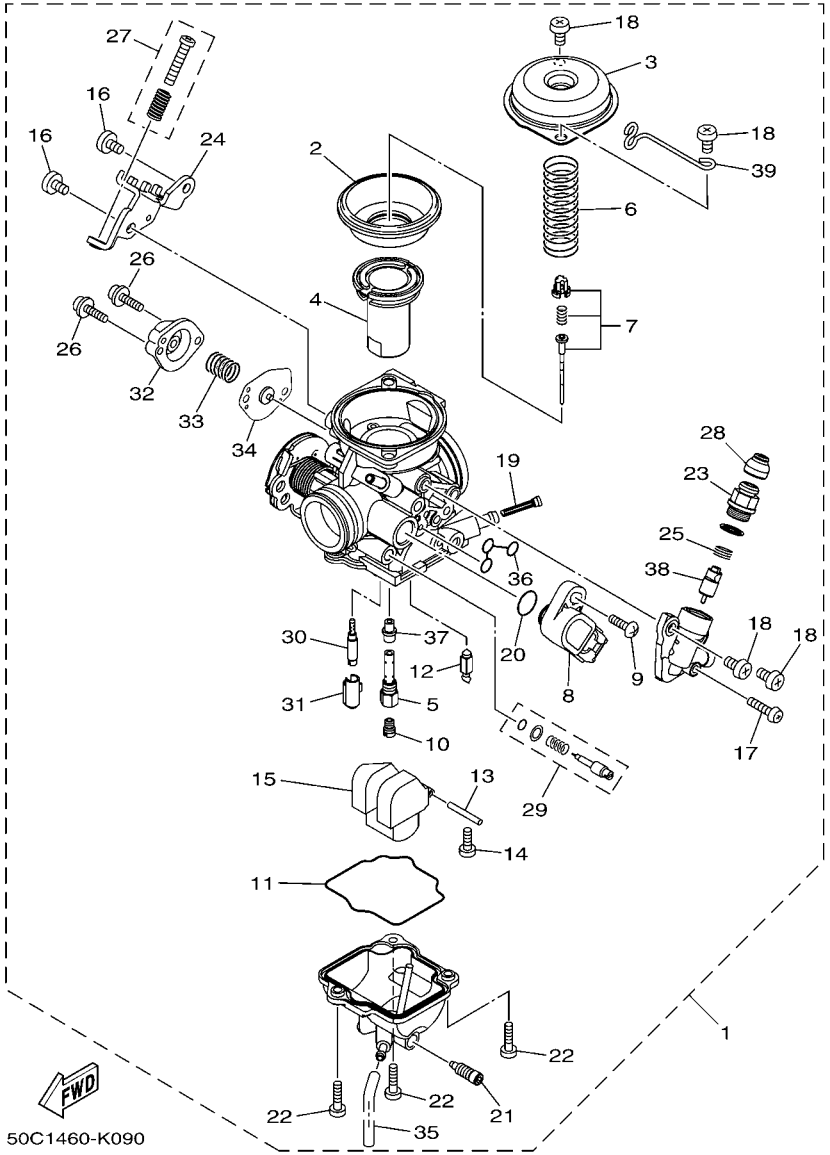

FIG. 9 CARBURETOR

REF. NO.	PART NO.	DESCRIPTION	55C5					REMARKS
1	55D–E4901–10	CARBURETOR ASSY 1	1					
2	5LW–24411–00	.DIAPHRAGM	1					
3	5LW–14958–00	.COVER, DIAPHRAGM	1					
4	31S–14112–00	.VALVE, THROTTLE 1	1					
5	50C–14261–00	.HOLDER	1					
6	50C–14589–00	.SPRING	1					
7	55D–1490J–00	.NEEDLE SET	1					
8	18D–H5885–00	.THROTTLE SENSOR ASSY	1					
9	5YP–14429–00	.SCREW	1					
10	3G2–14231–23	.JET, MAIN (#115)	1					
11	5HK–14147–00	.O-RING	1					
12	5LW–14150–00	.NEEDLE ASSY	1					
13	353–14186–00	.PIN, FLOAT	1					
14	98507–04008	.SCREW, PAN HEAD	1					
15	5HK–14985–00	.FLOAT	1					
16	98507–05008	.SCREW, PAN HEAD	2					
17	98507–04018	.SCREW, PAN HEAD	1					
18	98507–05010	.SCREW, PAN HEAD	4					
19	5LW–14994–00	.NET, FILTER	1					
20	5YP–14561–00	.O-RING	1					
21	5MP–14191–00	.PLUG, DRAIN	1					
22	98507–04014	.SCREW, PAN HEAD	3					
23	3RW–14174–00	.CAP, PLUNGER	1					
24	50C–14995–00	.BRACKET	1					
25	509–14135–00	.COIL, SPRING	1					
26	97607–04114	.SCREW,WITH WASHER	2					
27	5LW–14103–00	.THROTTLE SCREW SET	1					

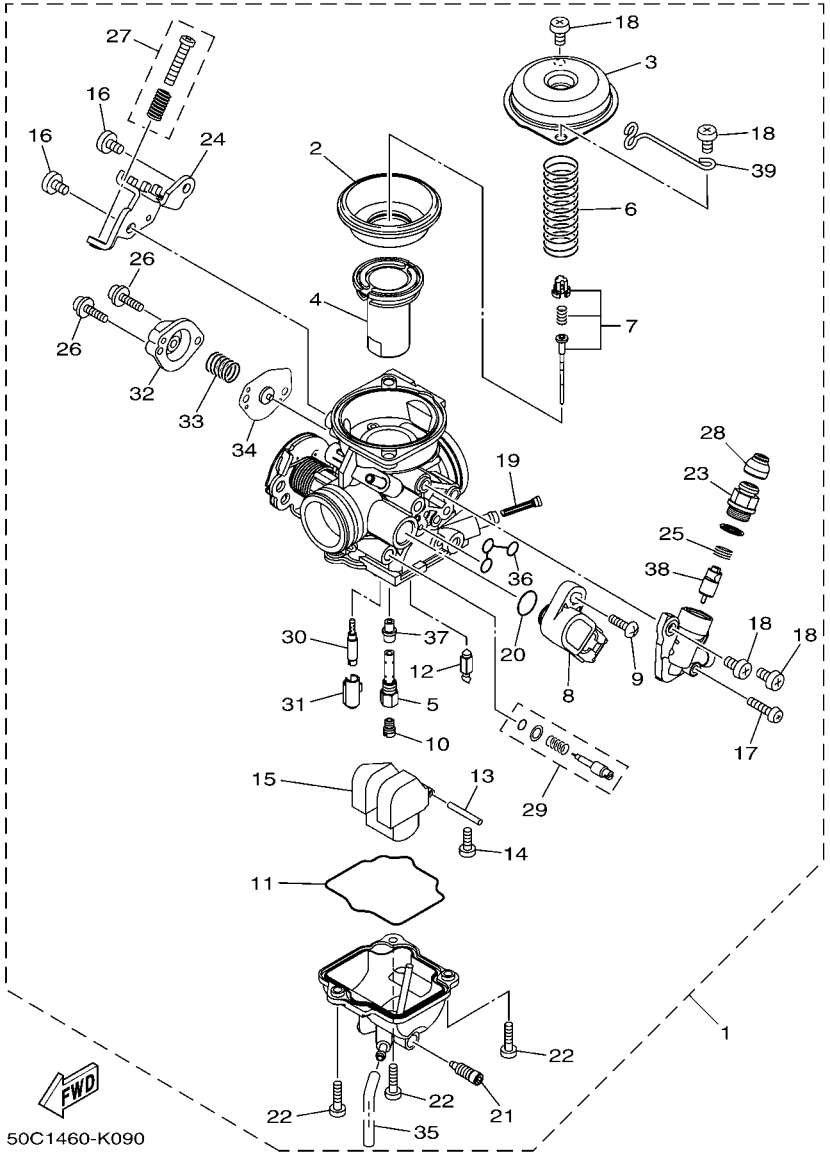

FIG. 9 CARBURETOR

REF. NO.	PART NO.	DESCRIPTION	55C5					REMARKS
28	22F–14173–00	.COVER, PLUNGER CAP	1					
29	50C–14105–00	.PILOT SCREW SET	1					
30	5P0–14142–15	.JET, PILOT (# 15)	1					
31	4JG–14261–00	.HOLDER	1					
32	33S–14280–00	.COVER, CARBURETOR	1					
33	5HK–14275–00	.SPRING	1					
34	5AP–14940–00	.DIAPHRAGM ASSY	1					
35	5FC–14149–00	.PIPE	1					
36	5LW–14147–00	.O-RING	1					
37	5P0–14141–13	.NOZZLE, MAIN	1					
38	5LW–14171–10	.PLUNGER, STARTER	1					
39	50C–14137–00	.CLIP	1					

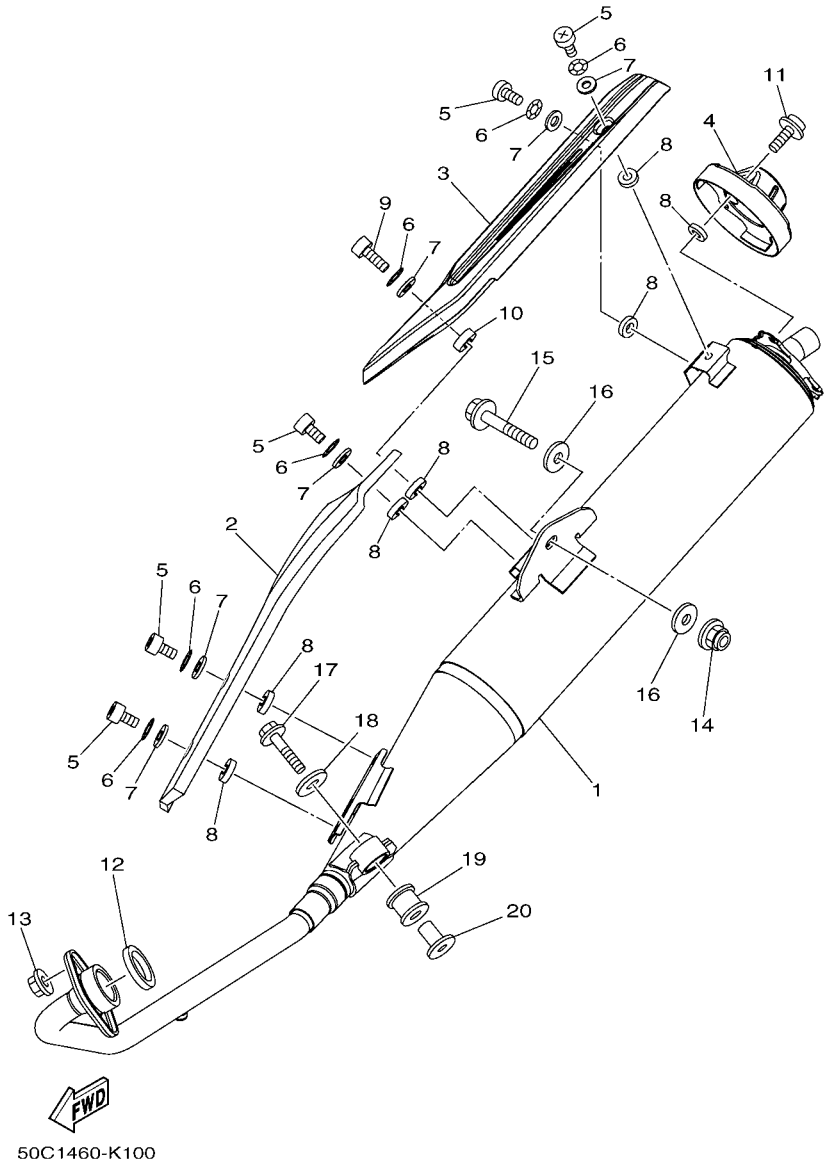

FIG. 10 EXHAUST

REF. NO.	PART NO.	DESCRIPTION	55C5					REMARKS
1	55C–E4703–00	MUFFLER COMP. 1	1					
2	55C–E4718–00	PROTECTOR, MUFFLER 1	1					
3	55C–E4728–00	PROTECTOR, MUFFLER 2	1					
4	55C–E4787–00	CAP, SILENCER	1					
5	98980–06010	SCREW, BIND	5					
6	90206–06090	WASHER, WAVE	6					
7	90202–05187	WASHER, PLATE	6					
8	90202–05188	WASHER, PLATE	9					
9	98980–06014	SCREW, BIND	1					
10	90387–061Y1	COLLAR	1					
11	90111–06802	BOLT,HEX. SOCKET BUTTON	3					
12	1S8–E4613–00	GASKET, EXHAUST PIPE	1					
13	95707–08500	NUT, FLANGE	2					
14	95707–10500	NUT, FLANGE	1					
15	95827–10045	BOLT, FLANGE	1					
16	90201–10141	WASHER, PLATE	2					
17	95807–08035	BOLT, FLANGE	1					
18	90201–08612	WASHER, PLATE	1					
19	29B–E4747–00	DAMPER, MUFFLER	1					
20	90387–08822	COLLAR	1					

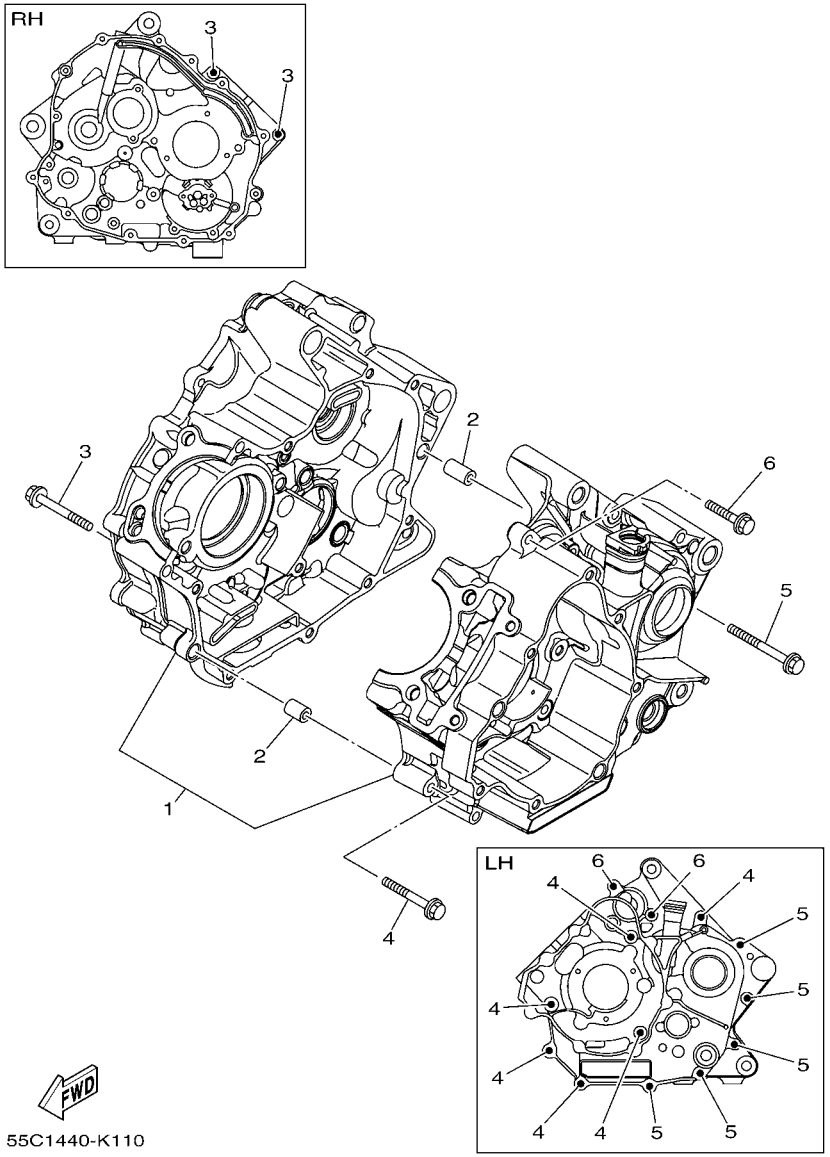

FIG. 11 CRANKCASE

REF. NO.	PART NO.	DESCRIPTION	55C5					REMARKS
1	50C–E5150–00	CRANKCASE ASSY	1					
2	99530–10114	PIN, DOWEL	2					
3	9502L–06055	BOLT, FLANGE	2					
4	9502L–06050	BOLT, FLANGE	6					
5	9502L–06070	BOLT, FLANGE	5					
6	9502L–06025	BOLT, FLANGE	2					

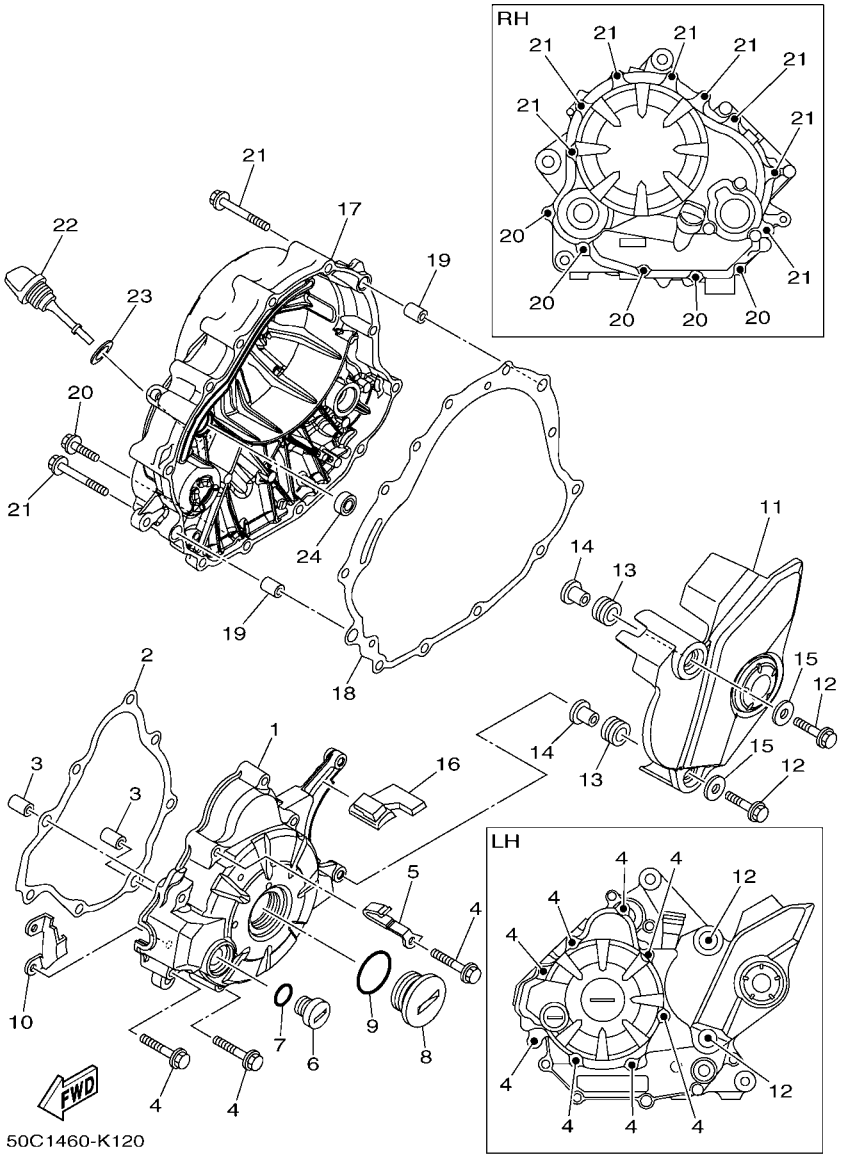

FIG. 12 CRANKCASE COVER 1

REF. NO.	PART NO.	DESCRIPTION	55C5					REMARKS
1	55C–E5411–00	COVER, CRANKCASE 1	1					
2	50C–E5451–00	GASKET, CRANKCASE COVER 1	1					
3	99530–10114	PIN, DOWEL	2					
4	9502L–06040	BOLT, FLANGE	8					
5	90462–08817	CLAMP	1					
6	90340–14816	PLUG, STRAIGHT SCREW	1					
7	93210–14899	O-RING	1					
8	90340–32819	PLUG, STRAIGHT SCREW	1					
9	93210–32803	O-RING	1					
10	5YP–E5113–00	PLATE	1					
11	55C–E5418–00	COVER, CHAIN CASE	1					
12	95022–06025	BOLT, FLANGE	2					
13	90480–13808	GROMMET	2					
14	90387–068K7	COLLAR	2					
15	90201–06822	WASHER, PLATE	2					
16	50C–E5377–00	GUIDE, INLET	1					
17	55C–E5421–00	COVER, CRANKCASE 2	1					
18	50C–E5461–00	GASKET, CRANKCASE COVER 2	1					
19	99530–10114	PIN, DOWEL	2					
20	9502L–06025	BOLT, FLANGE	5					
21	9502L–06050	BOLT, FLANGE	8					
22	50C–E5362–00	PLUG, OIL LEVEL	1					
23	93210–198F0	O-RING	1					
24	93101–10841	OIL SEAL	1					

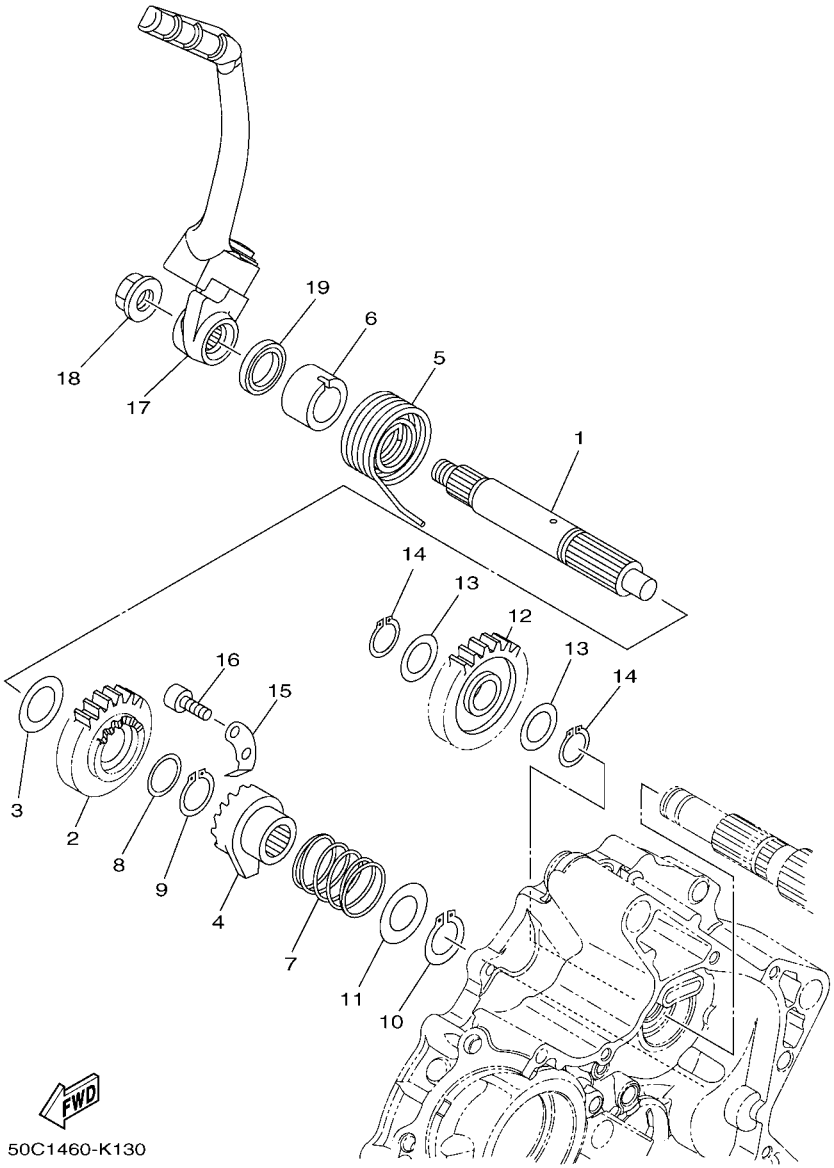

FIG. 13 STARTER

REF. NO.	PART NO.	DESCRIPTION	55C5					REMARKS
1	3C1–E5661–00	AXLE, KICK	1					
2	3C1–E5641–00	GEAR, KICK	1					
3	90201–20815	WASHER, PLATE	1					
4	3C1–E5671–10	WHEEL, RATCHET	1					
5	90508–26803	SPRING, TORSION	1					
6	3C1–E5666–00	SPACER	1					
7	3C1–E5767–00	SPRING	1					
8	90201–20685	WASHER, PLATE (T=0.5)	1					
9	93410–20038	CIRCLIP	1					
10	99009–19400	CIRCLIP	1					
11	90201–19800	WASHER, PLATE	1					
12	3C1–E5651–00	GEAR, KICK IDLE	1					
13	90201–175F6	WASHER, PLATE	2					
14	99009–17400	CIRCLIP	2					
15	3C1–E5674–00	GUIDE, RATCHET WHEEL	1					
16	91317–06016	BOLT	2					
17	55C–E5620–00	KICK CRANK ASSY	1					
18	90179–12802	NUT	1					
19	93109–20800	OIL SEAL	1					

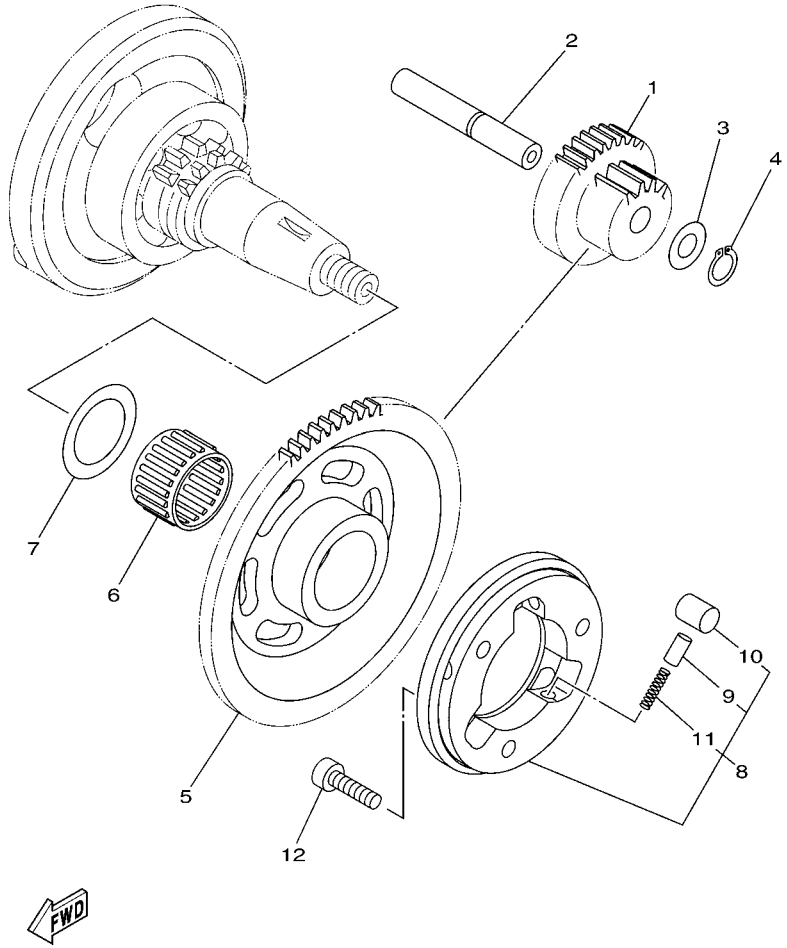

3C11460-F130

FIG. 14 STARTER CLUTCH

REF. NO.	PART NO.	DESCRIPTION	55C5					REMARKS
1	3C1–E5514–00	GEAR 2	1					
2	3C1–E5521–00	SHAFT 1	1					
3	90201–105E8	WASHER, PLATE	1					
4	99009–10400	CIRCLIP	1					
5	3C1–E5524–00	WHEEL, STARTER	1					
6	93310–325X1	BEARING	1					
7	90201–25290	WASHER, PLATE	1					
8	5YP–E5580–00	STARTER CLUTCH OUTER ASSY	1					
9	5HV–E5583–00	.CAP, STARTER CLUTCH SPRING	3					
10	5YP–E5614–00	.PIN, DOWEL	3					
11	90501–030A0	.SPRING, COMPRESSION	3					
12	91317–06020	BOLT	3					

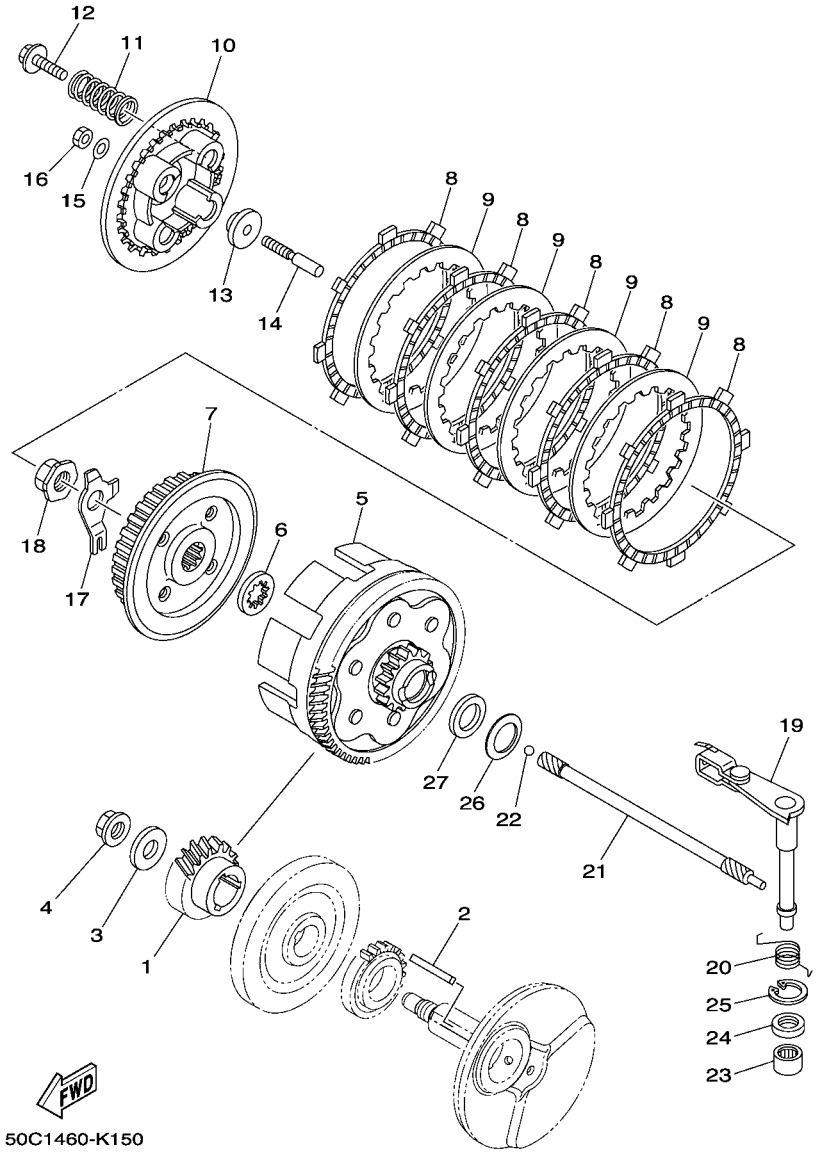

FIG. 15 CLUTCH

REF. NO.	PART NO.	DESCRIPTION	55C5					REMARKS
1	3C1–E6111–00	GEAR, PRIMARY DRIVE	1					
2	3C1–16193–00	KEY, FEATHER	1					
3	90201–12019	WASHER, PLATE	1					
4	90179–12802	NUT	1					
5	50C–E6150–00	PRIMARY DRIVEN GEAR COMP.	1					
6	50C–E6154–00	PLATE, THRUST 1	1					
7	2S6–E6371–02	BOSS, CLUTCH	1					
8	50C–E6321–00	PLATE, FRICTION	5					
9	2S6–E6324–00	PLATE, CLUTCH 1	4					
10	50C–E6351–00	PLATE, PRESSURE 1	1					
11	1S7–E6333–00	SPRING, CLUTCH 1	4					
12	1S7–E6777–00	BOLT	4					
13	3C1–E6358–00	PLATE, PUSH	1					
14	3C1–E6356–10	ROD, PUSH 1	1					
15	3C1–E6144–00	WASHER	1					
16	3C1–E6344–00	NUT, ADJUSTING	1					
17	2S6–E6135–00	WASHER, LOCK	1					
18	90179–14001	NUT	1					
19	50C–E6380–00	PUSH LEVER ASSY	1					
20	3C1–E6345–00	SPRING, RETURN	1					
21	3C1–E6357–10	ROD, PUSH 2	1					
22	93505–16844	BALL	1					
23	93315–112Y8	BEARING	1					
24	93102–12862	OIL SEAL	1					
25	99009–20500	CIRCLIP	1					
26	90208–20003	WASHER, CONICAL SPRING	1					
27	90201–20821	WASHER, PLATE	1					

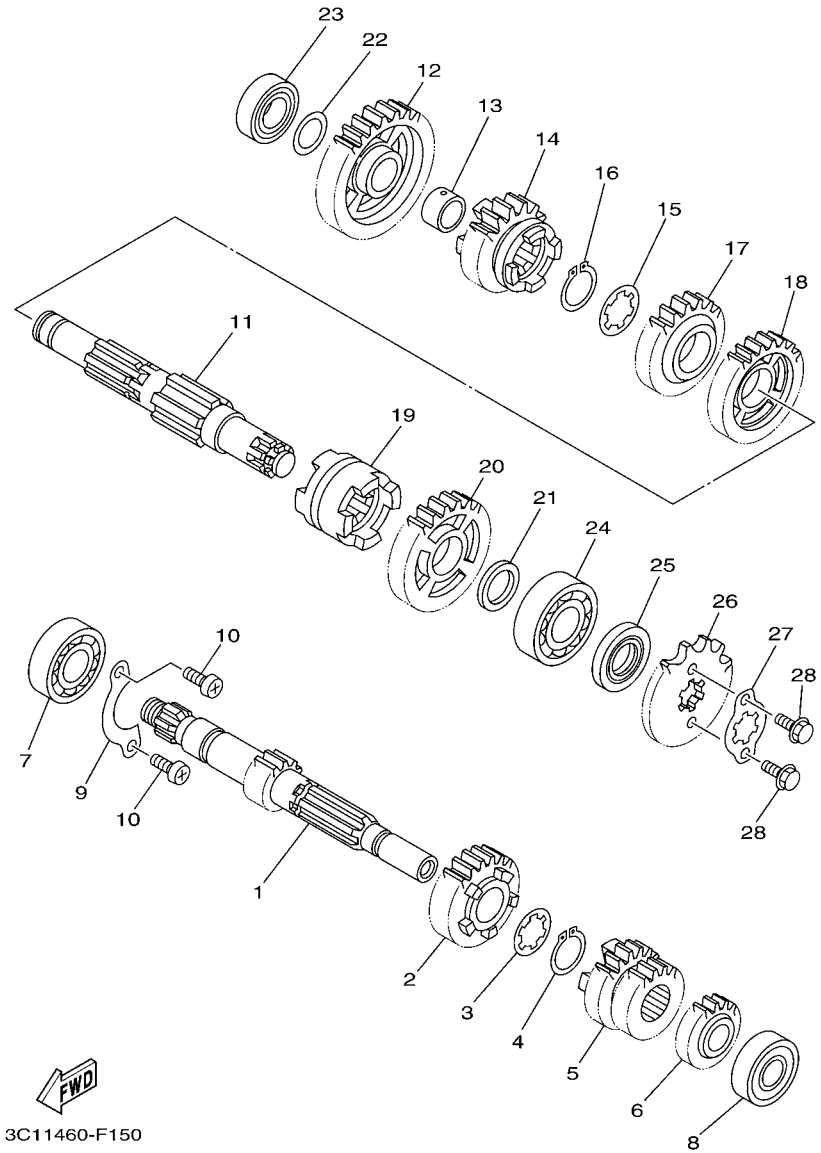

FIG. 16 TRANSMISSION

REF. NO.	PART NO.	DESCRIPTION	55C5					REMARKS
1	3C1–E7411–10	AXLE, MAIN (12T)	1					
2	50C–E7151–00	GEAR, 5TH PINION (27T)	1					
3	90209–17285	WASHER	1					
4	93410–20038	CIRCLIP	1					
5	50C–E7131–00	GEAR, 3RD PINION (21T/24T)	1					
6	3C1–E7121–00	GEAR, 2ND PINION (16T)	1					
7	93306–004XR	BEARING	1					
8	93306–252YL	BEARING	1					
9	3C1–E7471–00	PLATE, COVER	1					
10	98517–06012	SCREW, PAN HEAD	2					
11	3C1–E7402–00	DRIVE AXLE ASSY	1					
12	3C1–E7211–00	GEAR, 1ST WHEEL (34T)	1					
13	90387–17804	COLLAR	1					
14	50C–E7251–00	GEAR, 5TH WHEEL (26T)	1					
15	90209–18208	WASHER	1					
16	93410–22039	CIRCLIP	1					
17	50C–E7241–00	GEAR, 4TH WHEEL (28T)	1					
18	3C1–E7231–00	GEAR, 3RD WHEEL (30T)	1					
19	3C1–E7285–00	CLUTCH, DOG	1					
20	3C1–E7221–00	GEAR, 2ND WHEEL (30T)	1					
21	90201–20814	WASHER, PLATE	1					
22	90201–173F4	WASHER, PLATE	1					
23	93306–003Y7	BEARING	1					
24	93306–204YS	BEARING	1					
25	93102–20892	OIL SEAL	1					
26	93822–14815	SPROCKET, DRIVE (14T)	1					
27	3C1–E7456–00	HOLDER, SPROCKET	1					

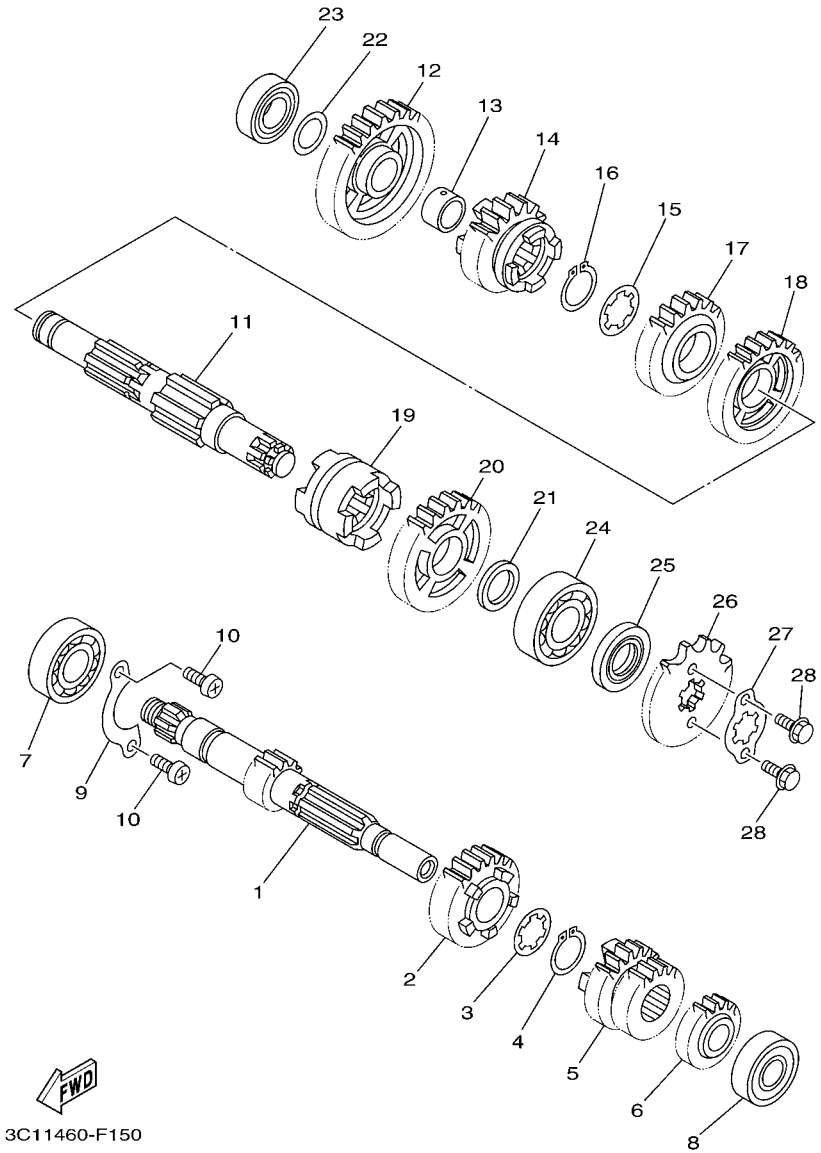

FIG. 16 TRANSMISSION

REF. NO.	PART NO.	DESCRIPTION	55C5					REMARKS
28	95027–06010	BOLT, FLANGE	2					

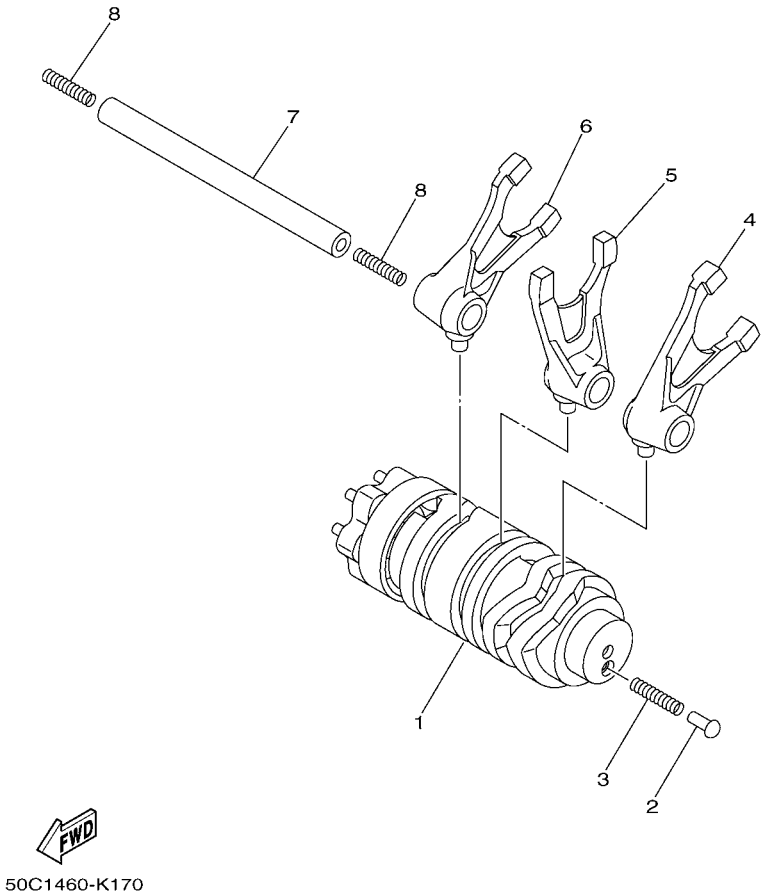

FIG. 17 SHIFT CAM & FORK

REF. NO.	PART NO.	DESCRIPTION	55C5					REMARKS
1	50C–E8540–00	SHIFT CAM ASSY	1					
2	5TP–E8542–00	POINT, NEUTRAL	1					
3	90501–06022	SPRING, COMPRESSION	1					
4	3C1–E8511–00	FORK, SHIFT 1	1					
5	3C1–E8512–00	FORK, SHIFT 2	1					
6	3C1–E8513–00	FORK, SHIFT 3	1					
7	3C1–E8531–00	BAR, SHIFT FORK GUIDE 1	1					
8	90501–06800	SPRING, COMPRESSION	2					

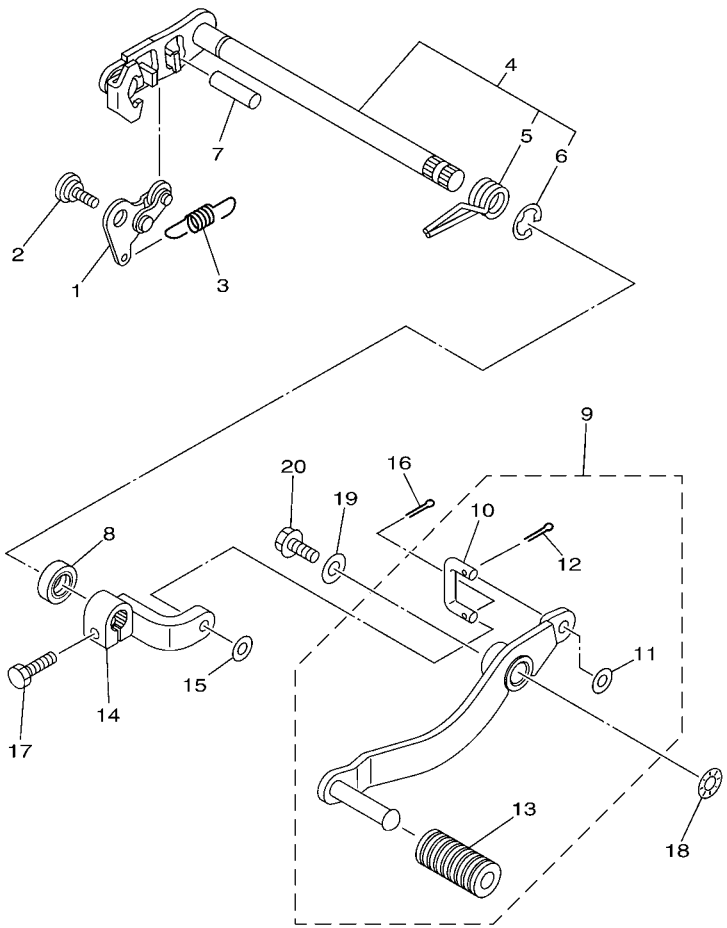

55C1440-K180

FIG. 18 SHIFT SHAFT

REF. NO.	PART NO.	DESCRIPTION	55C5					REMARKS
1	3C1–E8140–00	STOPPER LEVER ASSY	1					
2	3C1–E8119–00	BOLT, SHIFT	1					
3	3C1–E8337–00	SPRING	1					
4	50C–E8101–00	SHIFT SHAFT ASSY	1					
5	90508–32837	.SPRING, TORSION	1					
6	99001–10600	.CIRCLIP	1					
7	93608–30839	PIN, DOWEL	1					
8	93102–12891	OIL SEAL	1					
9	55C–E8110–00	SHIFT PEDAL ASSY	1					
10	55C–E8115–00	.ROD, SHIFT	1					
11	92907–06200	.WASHER	1					
12	91401–20012	.PIN, COTTER	1					
13	5H3–E8113–00	.COVER, SHIFT PEDAL	1					
14	55C–E8112–00	ARM, SHIFT	1					
15	92907–06200	WASHER	1					
16	91401–20012	PIN, COTTER	1					
17	97027–06020	BOLT, HEXAGON	1					
18	90206–12074	WASHER, WAVE	1					
19	90201–06021	WASHER, PLATE	1					
20	95827–06012	BOLT, FLANGE	1					

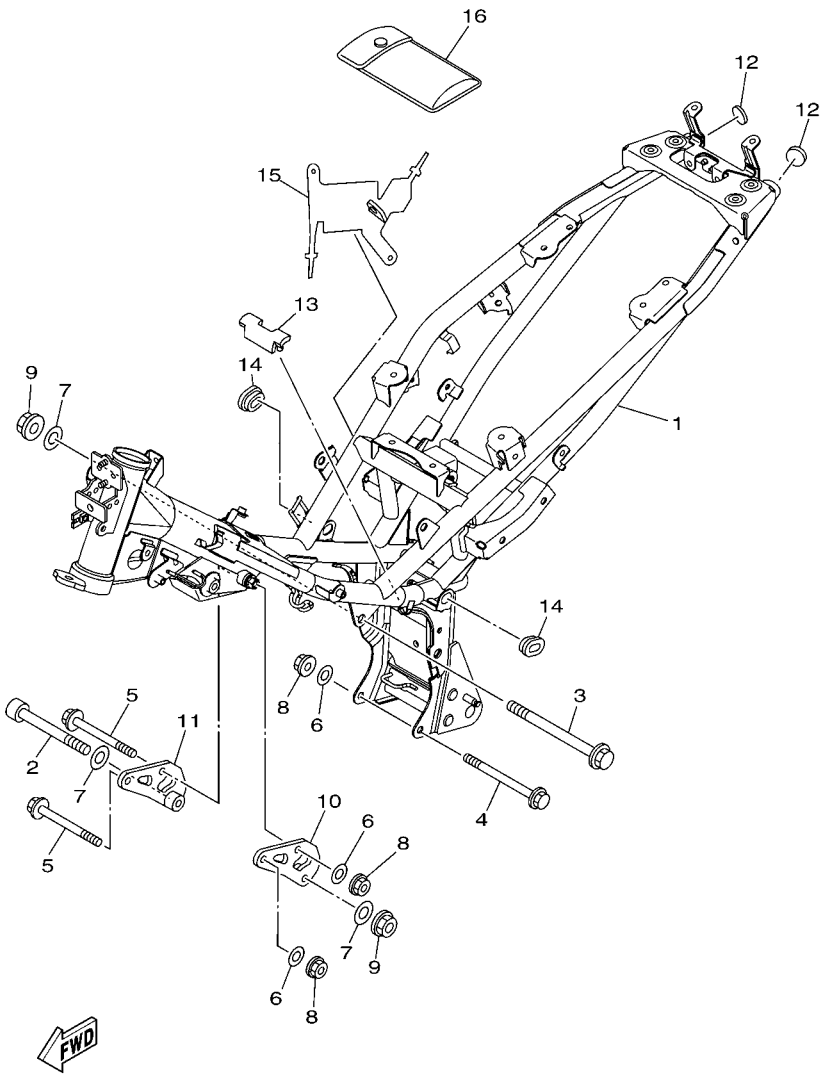

55C5440-N190

FIG. 19 FRAME

REF. NO.	PART NO.	DESCRIPTION	55C5					REMARKS
1	55C–F1110–10	FRAME COMP.	1					
2	91317–10100	BOLT	1					
3	90105–10861	BOLT, FLANGE	1					
4	90105–088D9	BOLT, FLANGE	1					
5	90105–088D8	BOLT, FLANGE	2					
6	90201–08804	WASHER, PLATE	3					
7	90201–101J1	WASHER, PLATE	3					
8	90179–08818	NUT	3					
9	90179–10811	NUT	2					
10	1S8–F1315–00	STAY, ENGINE 2	1					
11	1S8–F1316–00	STAY, ENGINE 2	1					
12	1S8–F139R–00	COVER 2	2					
13	1S8–F139X–00	DAMPER	1					
14	90480–01868	GROMMET	2					
15	1S8–F117G–00	PROTECTOR	1					
16	1S8–F8100–00	TOOL KIT	1					

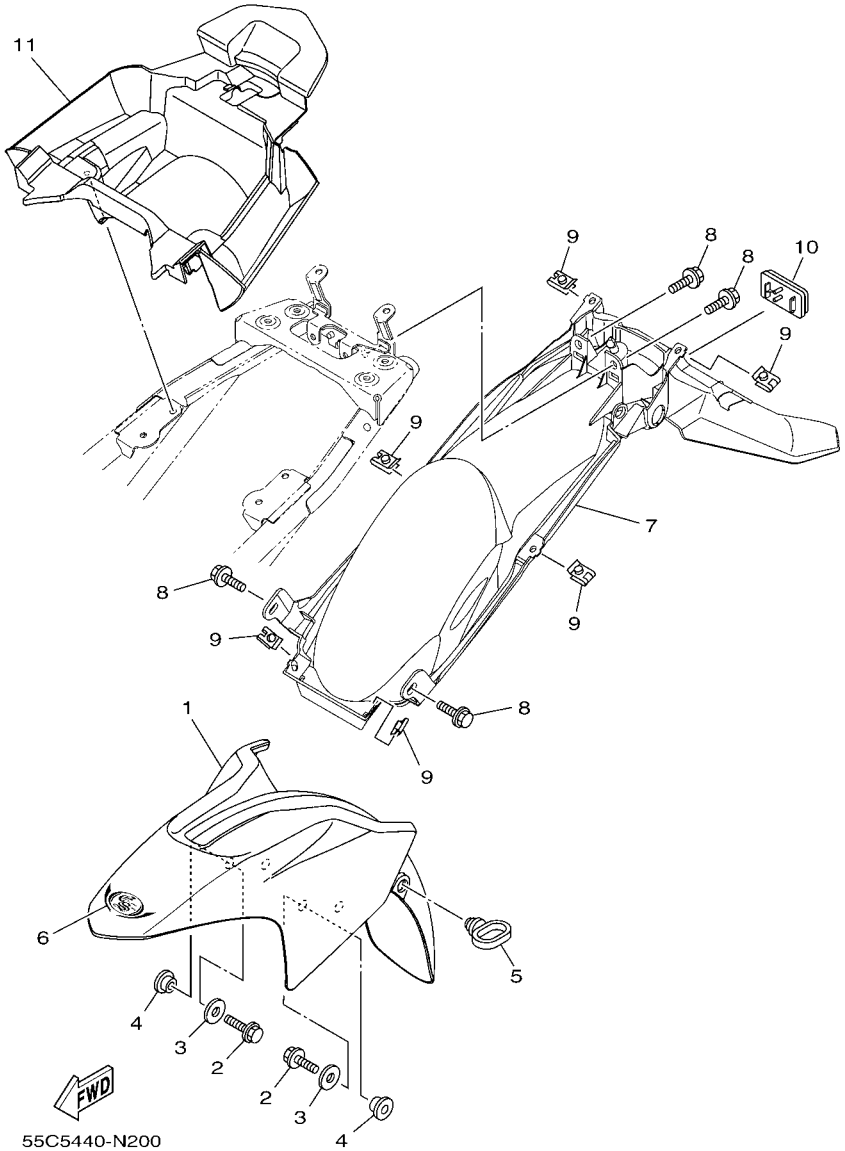

FIG. 20 FENDER

REF. NO.	PART NO.	DESCRIPTION	55C5					REMARKS
1	55C–F1511–00–P4	FENDER, FRONT	1					UR FOR S3
	55C–F1511–00–P0	FENDER, FRONT	1					UR FOR SMX
	55C–F1511–00–P5	FENDER, FRONT	1					UR FOR DBNM9
2	95827–06016	BOLT, FLANGE	4					
3	90201–06072	WASHER, PLATE	4					
4	90387–06804	COLLAR	4					
5	15K–F1518–00	HOLDER, CABLE	1					
6	55C–F1578–50	EMBLEM	1					UR FOR S3
	55C–F1578–60	EMBLEM	1					UR FOR SMX
	55C–F1578–70	EMBLEM	1					UR FOR DBNM9
7	55C–F1611–00	FENDER, REAR	1					
8	90119–06044	BOLT, WITH WASHER	4					
9	90183–05042	NUT, SPRING	6					
10	5VD–H5111–00	REFLECTOR, FRONT 1	1					
11	55C–F160E–00	BOX	1					

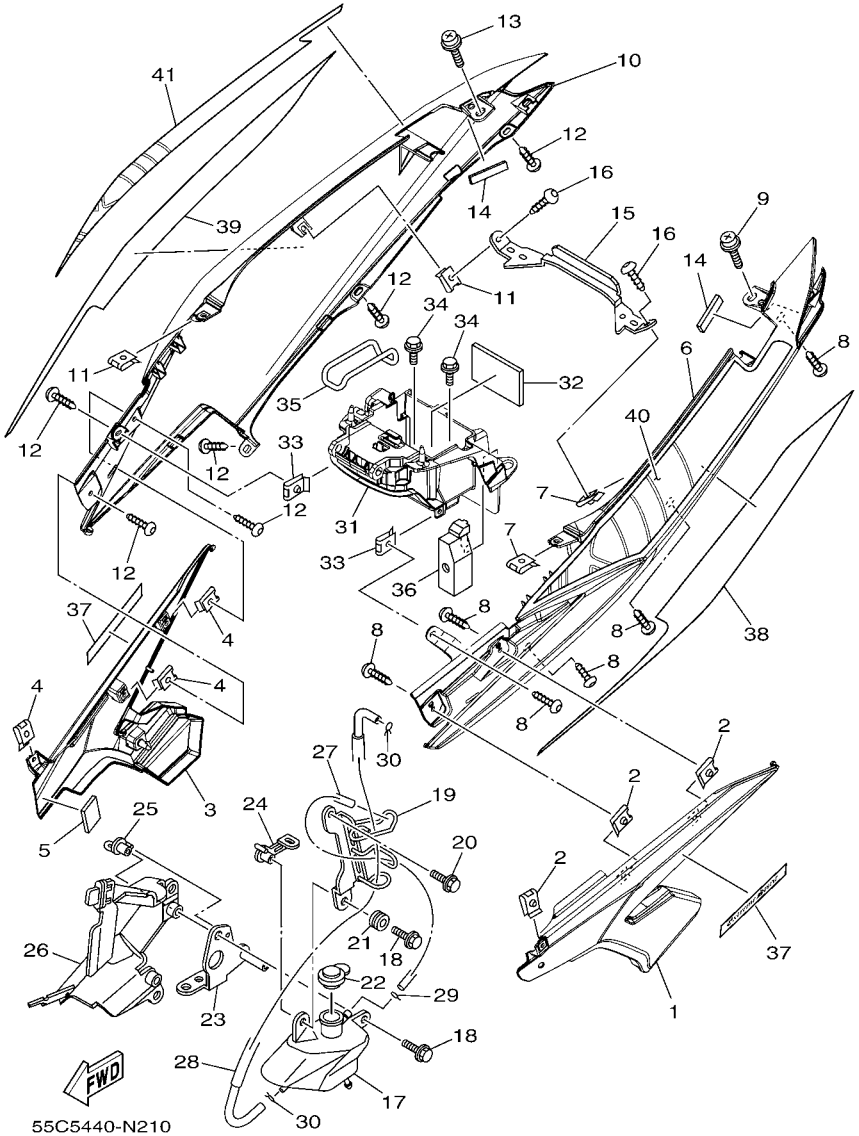

FIG. 21 SIDE COVER

REF. NO.	PART NO.	DESCRIPTION	55C5					REMARKS
1	55C–F1711–00–P4	COVER, SIDE 1	1					UR BMC FOR S3
	55C–F1711–00–P3	COVER, SIDE 1	1					UR MBL2 FOR SMX
	55C–F1711–00–P5	COVER, SIDE 1	1					UR FOR DBNM9
2	90183–05042	NUT, SPRING	3					
3	55C–F1721–00–P4	COVER, SIDE 2	1					UR BMC FOR S3
	55C–F1721–00–P3	COVER, SIDE 2	1					UR MBL2 FOR SMX
	55C–F1721–00–P5	COVER, SIDE 2	1					UR FOR DBNM9
4	90183–05042	NUT, SPRING	3					
5	90520–02806	DAMPER, PLATE	1					
6	55C–F1731–00–P0	COVER, SIDE 3	1					SMX
7	90183–05042	NUT, SPRING	2					
8	97707–50012	SCREW, TRUSS HEAD TAPPING	6					
9	90159–06181	SCREW, WITH WASHER	1					
10	55C–F1741–00–P0	COVER, SIDE 4	1					SMX
11	90183–05042	NUT, SPRING	2					
12	97707–50012	SCREW, TRUSS HEAD TAPPING	6					
13	90159–06181	SCREW, WITH WASHER	1					
14	90520–04806	DAMPER, PLATE	2					
15	55C–F172E–00	STAY, SIDE COVER 1	1					
16	97707–50012	SCREW, TRUSS HEAD TAPPING	2					
17	5YP–F1871–00	TANK, RECOVERY	1					
18	90119–06044	BOLT, WITH WASHER	2					
19	5YP–F172K–00	BRACKET 1	1					
20	95807–06020	BOLT, FLANGE	1					
21	90480–13805	GROMMET	1					
22	5YP–F1875–00	CAP	1					
23	55C–F172L–00	BRACKET 2	1					

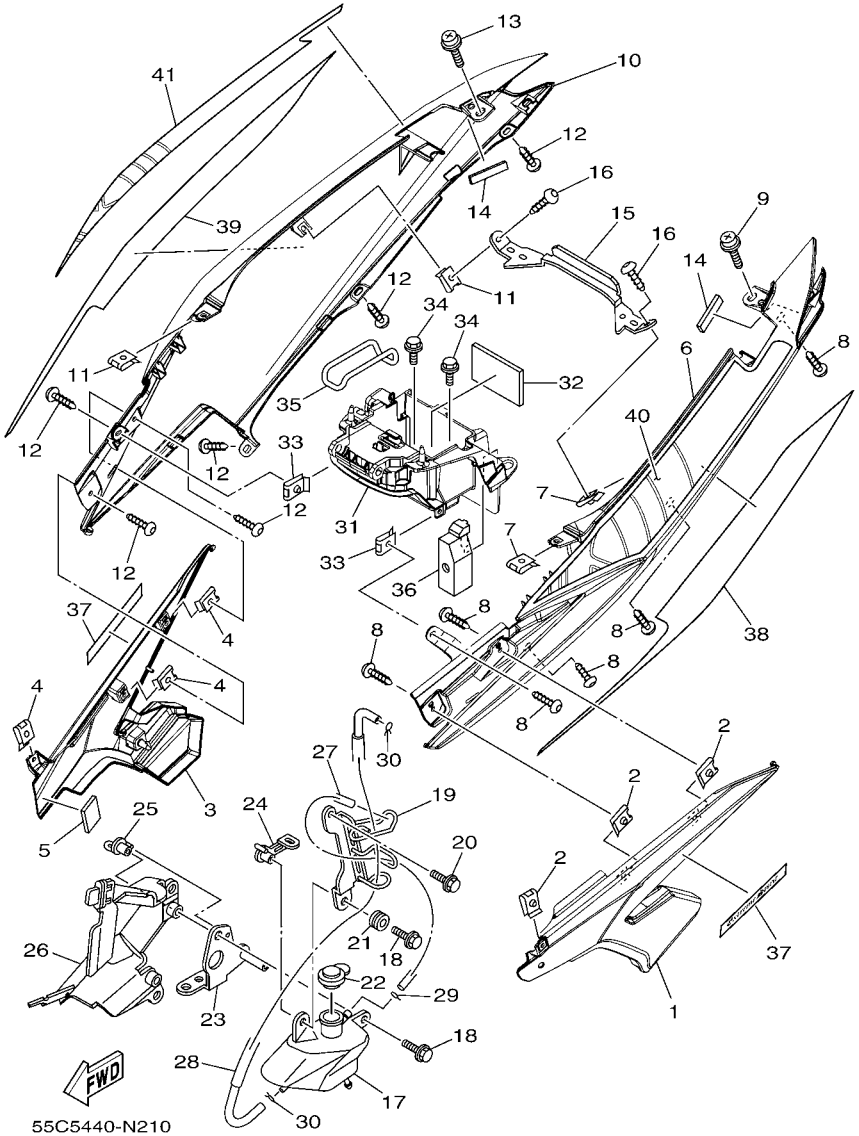

FIG. 21 SIDE COVER

REF. NO.	PART NO.	DESCRIPTION	55C5					REMARKS
24	5YP–F172M–00	BRACKET 3	1					
25	50C–F1173–00	BOSS, WIRE HOLDER	1					
26	1S8–F172W–00	COVER	1					
27	90445–09823	HOSE	1					
28	55C–F1817–00	PIPE 2	1					
29	90467–08003	CLIP	1					
30	90467–09006	CLIP	2					
31	55C–F177G–00	BOX, BATTERY	1					
32	90520–02807	DAMPER, PLATE	1					
33	90183–05042	NUT, SPRING	2					
34	90119–06044	BOLT, WITH WASHER	2					
35	5VW–H2131–00	BAND, BATTERY	1					
36	1S8–E4293–00	COVER 1	1					
37	55C–F173E–00	GRAPHIC 1	2					UR FOR S3,DBNM9
	55C–F173E–20	GRAPHIC 1	2					UR FOR SMX
38	55C–F174G–50	GRAPHIC 3	1					UR FOR S3
	55C–F174G–60	GRAPHIC 3	1					UR FOR SMX
	55C–F174G–70	GRAPHIC 3	1					UR FOR DBNM9
39	55C–F174H–50	GRAPHIC 4	1					UR FOR S3
	55C–F174H–60	GRAPHIC 4	1					UR FOR SMX
	55C–F174H–70	GRAPHIC 4	1					UR FOR DBNM9
40	55C–F174J–50	GRAPHIC 5	1					UR FOR S3
	55C–F174J–60	GRAPHIC 5	1					UR FOR SMX
	55C–F174J–70	GRAPHIC 5	1					UR FOR DBNM9
41	55C–F174K–50	GRAPHIC 6	1					UR FOR S3
	55C–F174K–60	GRAPHIC 6	1					UR FOR SMX
	55C–F174K–70	GRAPHIC 6	1					UR FOR DBNM9

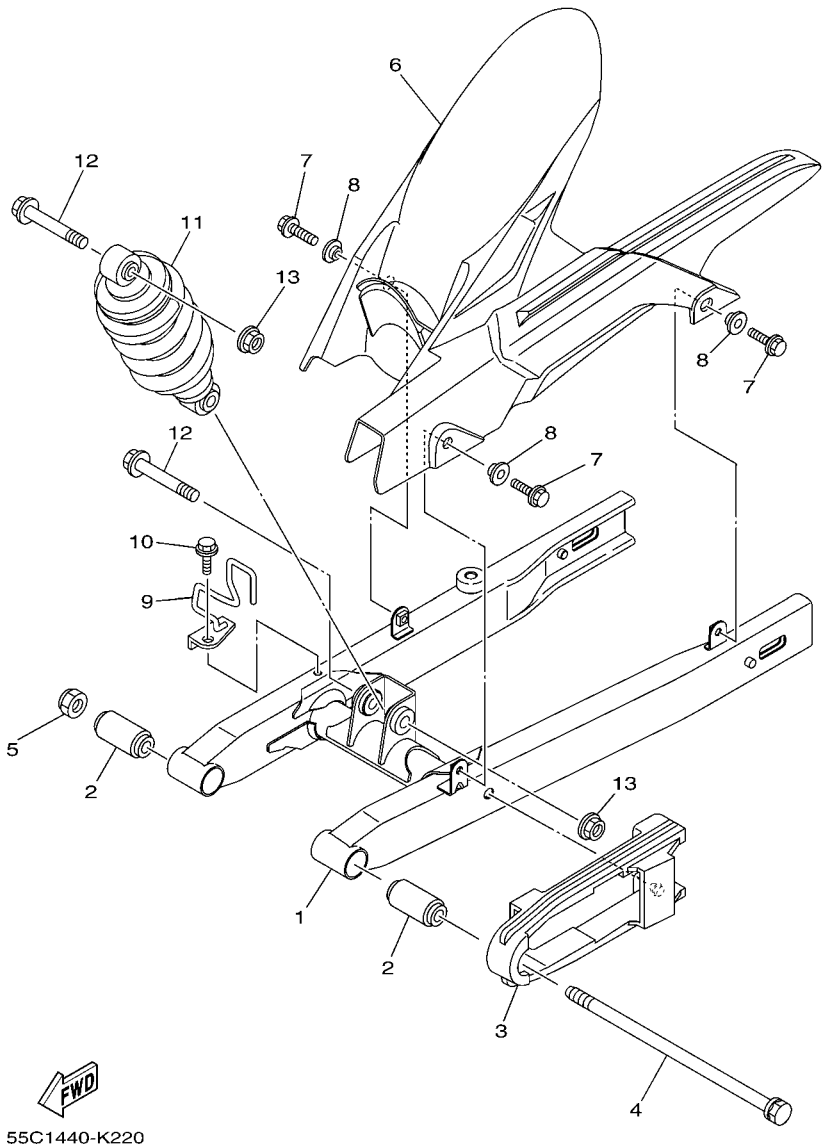

FIG. 22 REAR ARM & SUSPENSION

REF. NO.	PART NO.	DESCRIPTION	55C5					REMARKS
1	55C–F2110–00	REAR ARM COMP.	1					
2	4UL–F2123–00	BUSH 1	2					
3	55C–F2151–00	SEAL, GUARD	1					
4	50C–F2141–00	SHAFT, PIVOT	1					
5	95614–12100	NUT, U	1					
6	55C–F1650–00	REAR FENDER COMP.	1					
7	95827–06014	BOLT, FLANGE	3					
8	90387–07819	COLLAR	3					
9	55C–F5887–00	HOLDER, BRAKE HOSE	1					
10	95827–06010	BOLT, FLANGE	1					
11	55C–F2210–00	SHOCK ABSORBER ASSY, REAR	1					
12	90105–10323	BOLT, FLANGE	2					
13	95607–10200	NUT, U FLANGE	2					

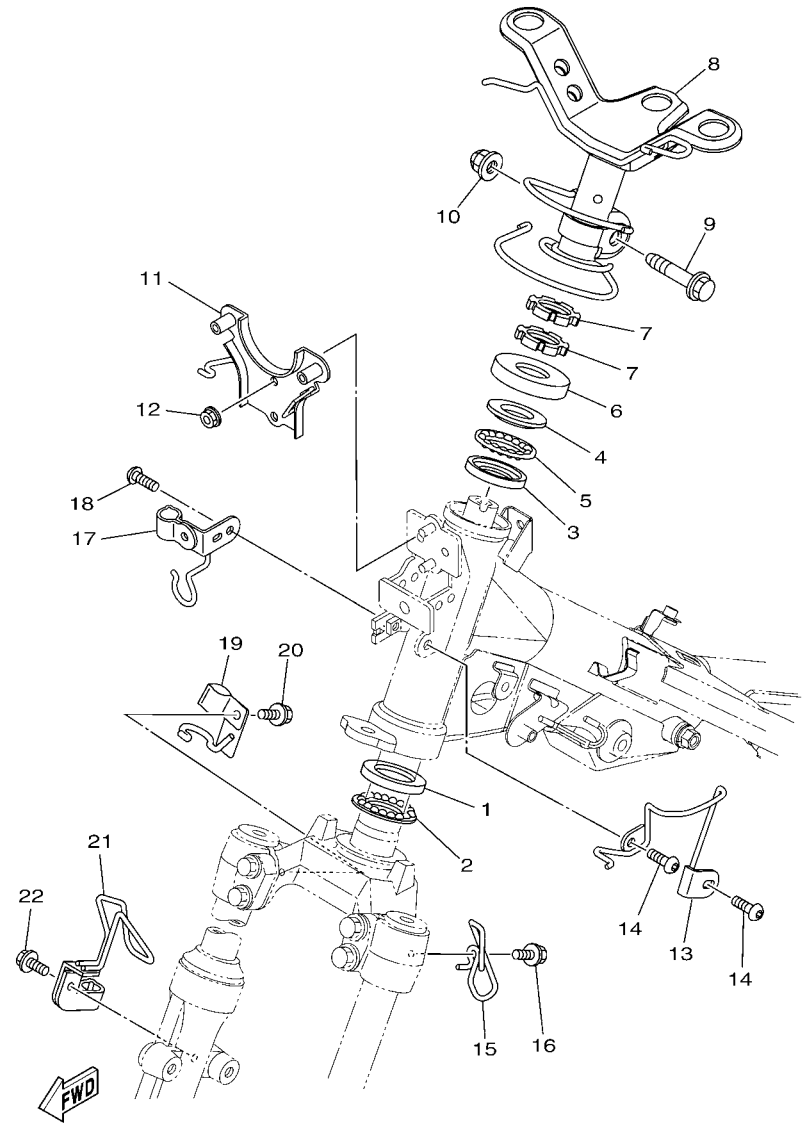

55C5440-N230

FIG. 23 STEERING

REF. NO.	PART NO.	DESCRIPTION	55C5					REMARKS
1	156–23412–00	RACE, BALL 2	1					
2	5TL–2341E–00	RETAINER, BALL BEARING (16)	1					
3	22F–23412–01	RACE, BALL 2	1					
4	22F–23411–01	RACE, BALL 1	1					
5	5TL–2341E–10	RETAINER, BALL BEARING (19)	1					
6	5VV–F3416–00	COVER, BALL RACE 2	1					
7	90179–25802	NUT	2					
8	55C–F3461–00	BRACKET, HANDLE	1					
9	90105–10036	BOLT, FLANGE	1					
10	90185–10154	NUT, SELF-LOCKING	1					
11	55C–F331A–10	STAY	1					
12	95707–06500	NUT, FLANGE	2					
13	55C–F1161–10	HOLDER, CABLE	1					
14	92017–06010	BOLT, BUTTON HEAD	2					
15	55C–F3389–00	GUIDE, CABLE	1					
16	90119–06044	BOLT, WITH WASHER	1					
17	55C–F5875–10	HOLDER, BRAKE HOSE 1	1					
18	92017–06010	BOLT, BUTTON HEAD	2					
19	50C–F587A–00	HOLDER, BRAKE HOSE	1					
20	95807–06012	BOLT, FLANGE	1					
21	55C–F5876–10	HOLDER, BRAKE HOSE 2	1					
22	95807–06012	BOLT, FLANGE	1					

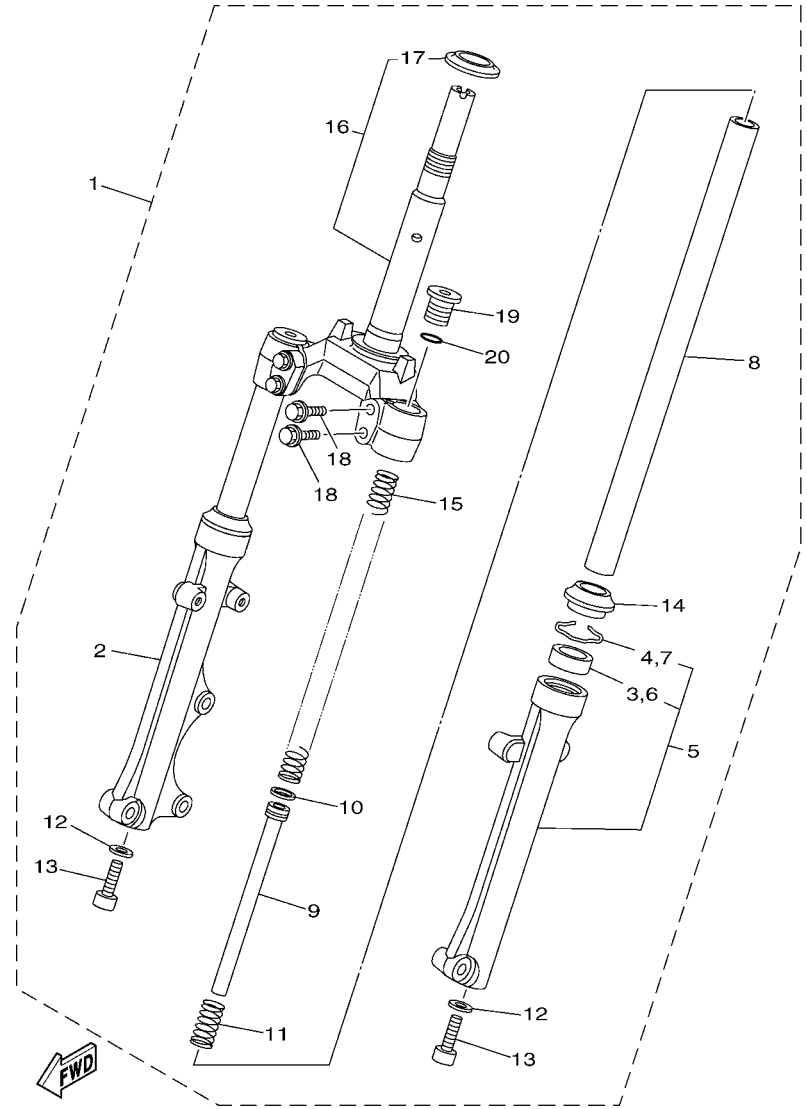

50C1460-K240

FIG. 24 FRONT FORK

REF. NO.	PART NO.	DESCRIPTION	55C5					REMARKS
1	55C–F3100–00	FRONT FORK ASSY	1					
2	55C–F3136–00	.TUBE, OUTER	1					
3	4UV–F3145–00	..OIL SEAL	1					
4	5P0–F3156–00	..RING, SNAP	1					
5	55P–F3126–00	.TUBE, OUTER (L.H)	1					
6	4UV–F3145–00	..OIL SEAL	1					
7	5P0–F3156–00	..RING, SNAP	1					
8	55C–F3110–00	.INNER TUBE COMP.1	2					
9	5P2–F3170–00	.CYLINDER COMP., FRONT FORK	2					
10	2JG–F3157–00	.RING, PISTON	2					
11	5TF–F3152–00	.SPRING, SUB	2					
12	509–F3158–L0	.GASKET	2					
13	31D–F3181–50	.BOLT, HEXAGON SOCKET HEAD	2					
14	5LL–F3144–00	.SEAL, DUST	2					
15	50C–F3141–00	.SPRING, FRONT FORK	2					
16	50C–F3340–00	.UNDER BRACKET COMP.	1					
17	49P–F3411–00	..RACE, BALL 1	1					
18	4D0–F3346–00	.BOLT 1	4					
19	4VK–F3111–10	.BOLT, CAP	2					
20	2JG–F3147–00	.O-RING	2					

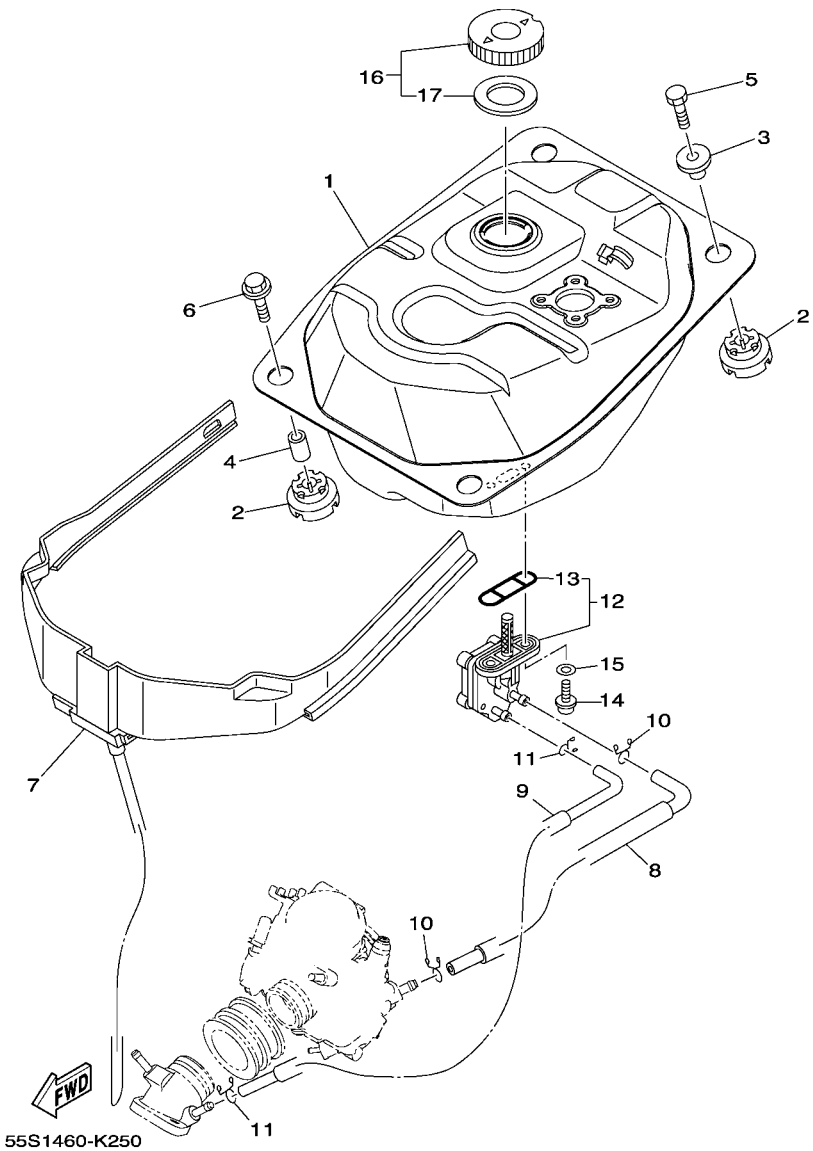

FIG. 25 FUEL TANK

REF. NO.	PART NO.	DESCRIPTION	55C5					REMARKS
1	1S8–F4110–00	FUEL TANK COMP.	1					
2	1S8–F4339–00	GROMMET	4					
3	1S8–F4638–00	COLLAR	2					
4	1S8–F4397–00	COLLAR	2					
5	97007–06025	BOLT	2					
6	90119–06190	BOLT, WITH WASHER	2					
7	21S–F4141–00	PROTECTOR, FUEL TANK	1					
8	55C–F4311–00	PIPE, FUEL 1	1					
9	55C–F4312–00	PIPE 2	1					
10	90467–09006	CLIP	2					
11	90467–08075	CLIP	2					
12	5YP–F4500–01	FUEL COCK ASSY 1	1					
13	4X8–24512–00	.O-RING	1					
14	90149–06011	SCREW	2					
15	90202–05193	WASHER, PLATE	2					
16	5LW–F4610–01	CAP ASSY	1					
17	5LW–F4612–01	.PACKING, CAP	1					

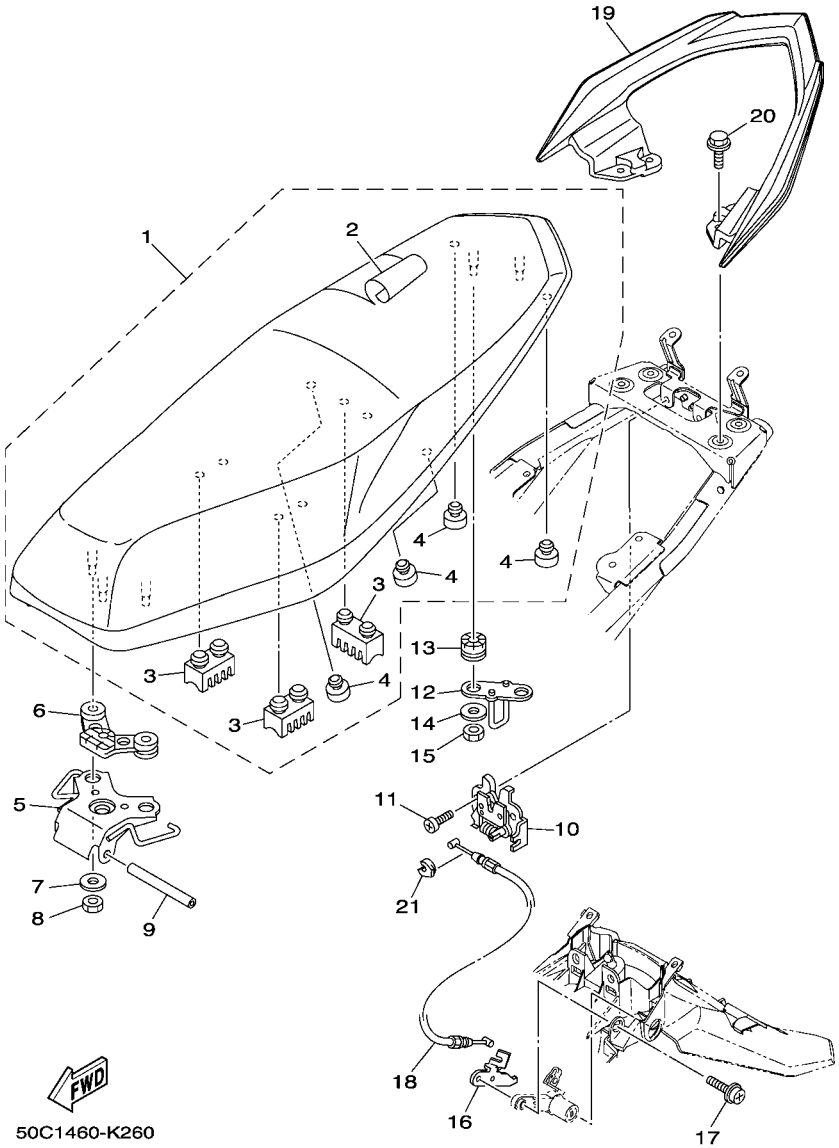

FIG. 26 SEAT

REF. NO.	PART NO.	DESCRIPTION	55C5					REMARKS
1	55C–F4730–10	DOUBLE SEAT ASSY	1					UR FOR S3,DBNM9
	55C–F4730–20	DOUBLE SEAT ASSY	1					UR FOR SMX
2	55C–F470F–10	.SEAT COVER COMP.	1					UR FOR S3,DBNM9
	55C–F470F–00	.SEAT COVER COMP.	1					UR FOR SMX
3	5TF–F4723–00	.DAMPER, SEAT	3					
4	4HF–F4741–00	.PAD, SEAT	4					
5	55C–F4726–00	HINGE, SEAT	1					
6	1S8–F4742–00	GROMMET	1					
7	90201–068N7	WASHER, PLATE	3					
8	95307–06600	NUT	3					
9	5VV–F4727–00	PIN, SEAT FITTING	1					
10	5P0–F4780–01	SEAT LOCK ASSY	1					
11	98507–06012	SCREW, PAN HEAD	2					
12	1S8–F4728–00	BRACKET, SEAT	1					
13	90480–14872	GROMMET	2					
14	90201–06071	WASHER, PLATE	2					
15	95307–06600	NUT	2					
16	55C–F117K–00	STAY, LOCK	1					
17	90159–06033	SCREW, WITH WASHER	1					
18	55C–F478E–10	CABLE, SEAT LOCK	1					
19	55C–F4773–00–P4	HANDLE, SEAT	1					UR FOR S3
	55C–F4773–00–P0	HANDLE, SEAT	1					UR FOR SMX
	55C–F4773–00–P5	HANDLE, SEAT	1					UR FOR DBNM9
20	95827–06020	BOLT, FLANGE	4					
21	1S8–F4768–00	STOPPER	1					

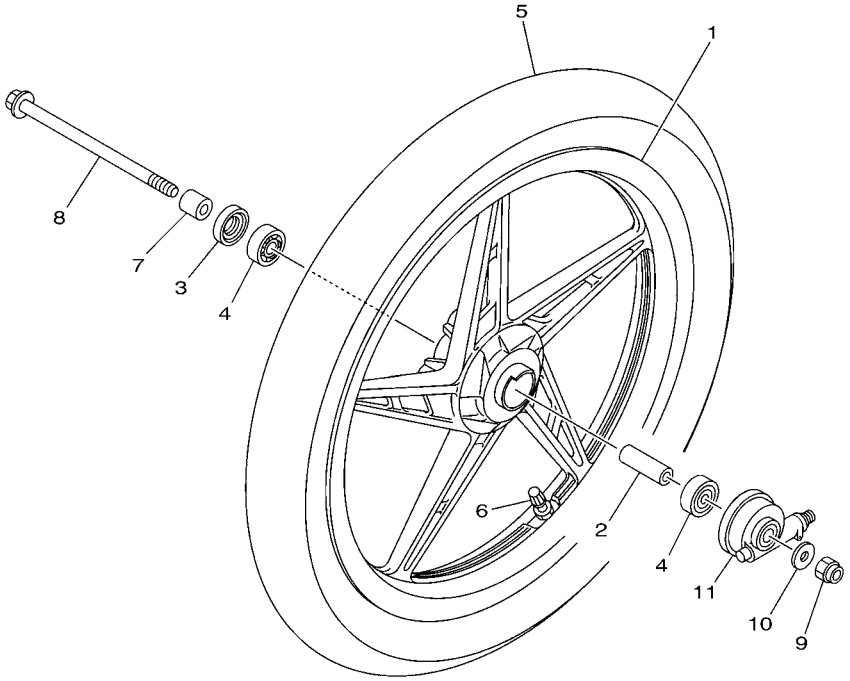

55C1440-K270

FIG. 27 FRONT WHEEL

REF. NO.	PART NO.	DESCRIPTION	55C5					REMARKS
1	1S8–F5168–00–1X	CAST WHEEL, FRONT	1					UR YB FOR S3
	1S8–F5168–00–33	CAST WHEEL, FRONT	1					UR YB FOR SMX
	1S8–F5168–00–0X	CAST WHEEL, FRONT	1					UR YB/W FOR DBNM9
2	90560–10292	SPACER	1					
3	93106–20816	OIL SEAL	1					
4	93306–300X8	BEARING	2					
5	94107–17853	TIRE (70/90-17 M/C 38P)	1					DURO
6	93900–00817	VALVE, RIM (TR412)	1					
7	90387–10277	COLLAR	1					
8	3NA–F5181–01	AXLE, WHEEL	1					
9	90185–10091	NUT, SELF-LOCKING	1					
10	90201–101J1	WASHER, PLATE	1					
11	5TN–F5190–01	GEAR UNIT ASSY	1					

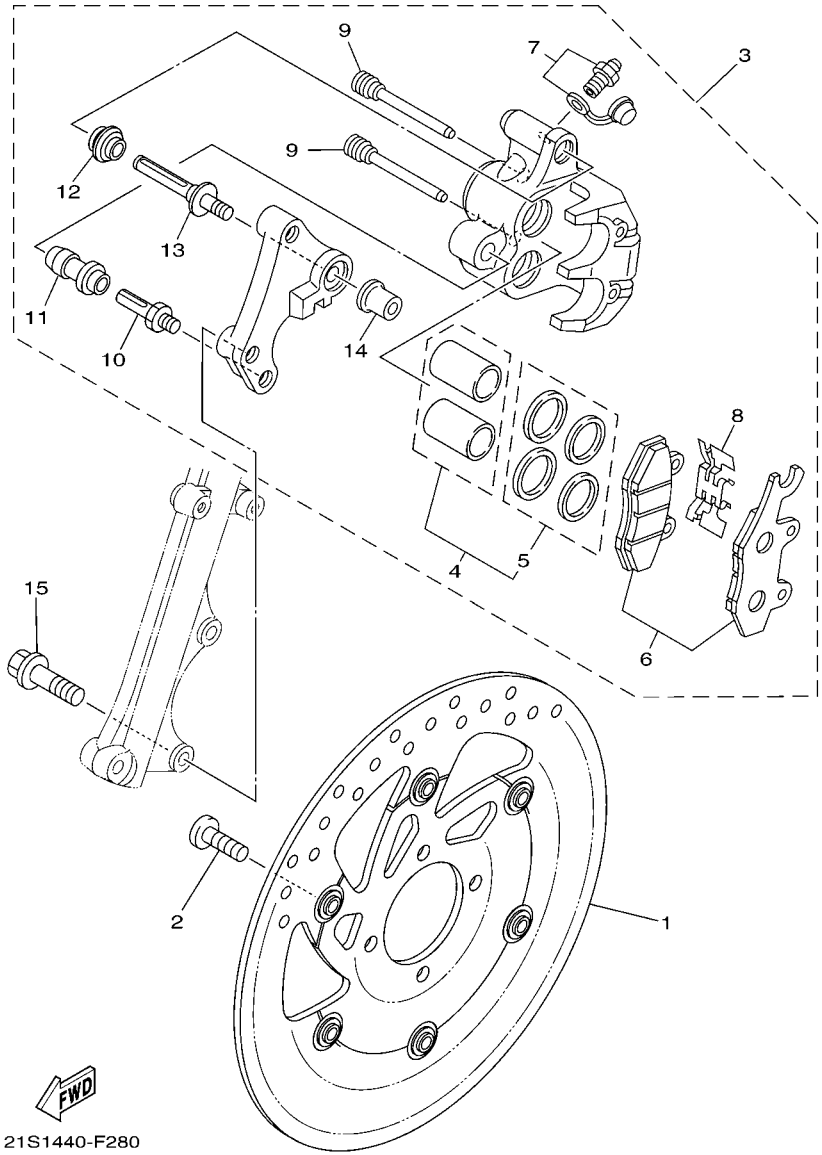

FIG. 28 FRONT BRAKE CALIPER

REF. NO.	PART NO.	DESCRIPTION	55C5					REMARKS
1	5XK–F582U–00	DISK, BRAKE (RIGHT)	1					
2	90111–08853	BOLT,HEX. SOCKET BUTTON	4					
3	5XK–F580U–00	CALIPER ASSY (RIGHT)	1					
4	5BU–WF057–00	.PISTON ASSY, CALIPER	1					
5	3LC–WF047–50	..CALIPER SEAL KIT	1					
6	5XK–W0045–00	.BRAKE PAD KIT	1					
7	1UY–WF048–50	.BLEED SCREW KIT	1					
8	3LD–F5934–01	.SPRING, PAD	1					
9	3LD–F5924–00	.PIN, PAD	2					
10	3SP–25914–51	.PIN, SLIDE	1					
11	1UY–25937–51	.BOOT 2	1					
12	3JD–25917–00	.BOOT, CALIPER	1					
13	5NM–2536G–00	.PIN	1					
14	3JD–F5961–00	.NUT	1					
15	90105–10638	BOLT, FLANGE	2					

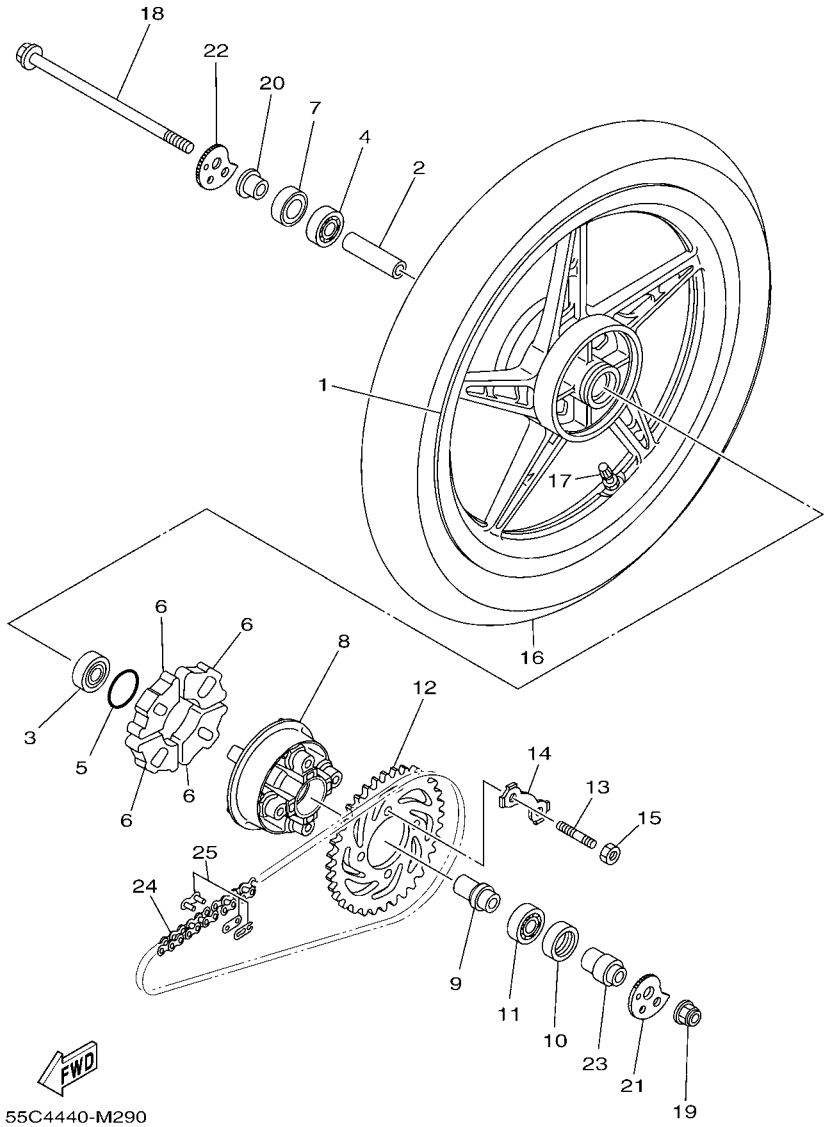

FIG. 29 REAR WHEEL

REF. NO.	PART NO.	DESCRIPTION	55C5					REMARKS
1	55C–F5338–10–7X	CAST WHEEL, REAR	1					UR YB FOR S3
	55C–F5338–10–33	CAST WHEEL, REAR	1					UR YB FOR SMX
	55C–F5338–10–8X	CAST WHEEL, REAR	1					UR YB/W FOR DBNM9
2	90387–123A9	COLLAR	1					
3	93306–301XC	BEARING	1					UR
	93306–301YM	BEARING	1					UR
4	93306–301YW	BEARING	1					
5	93210–41041	O-RING	1					
6	1S8–F5364–00	DAMPER	4					
7	93106–20817	OIL SEAL	1					
8	55C–F5366–00	CLUTCH, HUB	1					
9	90387–12847	COLLAR	1					
10	93106–26815	OIL SEAL	1					
11	93306–004XB	BEARING	1					
12	55C–F5438–00	SPROCKET, DRIVEN (38T)	1					
13	90116–08017	BOLT, STUD	4					
14	5XK–F5412–00	WASHER	2					
15	90170–08258	NUT	4					
16	94110–17819	TIRE (100/70-17 M/C 50P)	1					DURO
17	93900–00817	VALVE, RIM (TR412)	1					
18	50C–F5381–00	AXLE, WHEEL	1					
19	95607–12200	NUT, SELF-LOCKING	1					
20	90387–123N2	COLLAR	1					
21	50C–F5388–00	PULLER, CHAIN 1	1					
22	50C–F5389–00	PULLER, CHAIN 2	1					
23	55C–F5377–01	COLLAR, WHEEL	1					
24	94568–84111	CHAIN (RK-M 482M X 111L)	1					

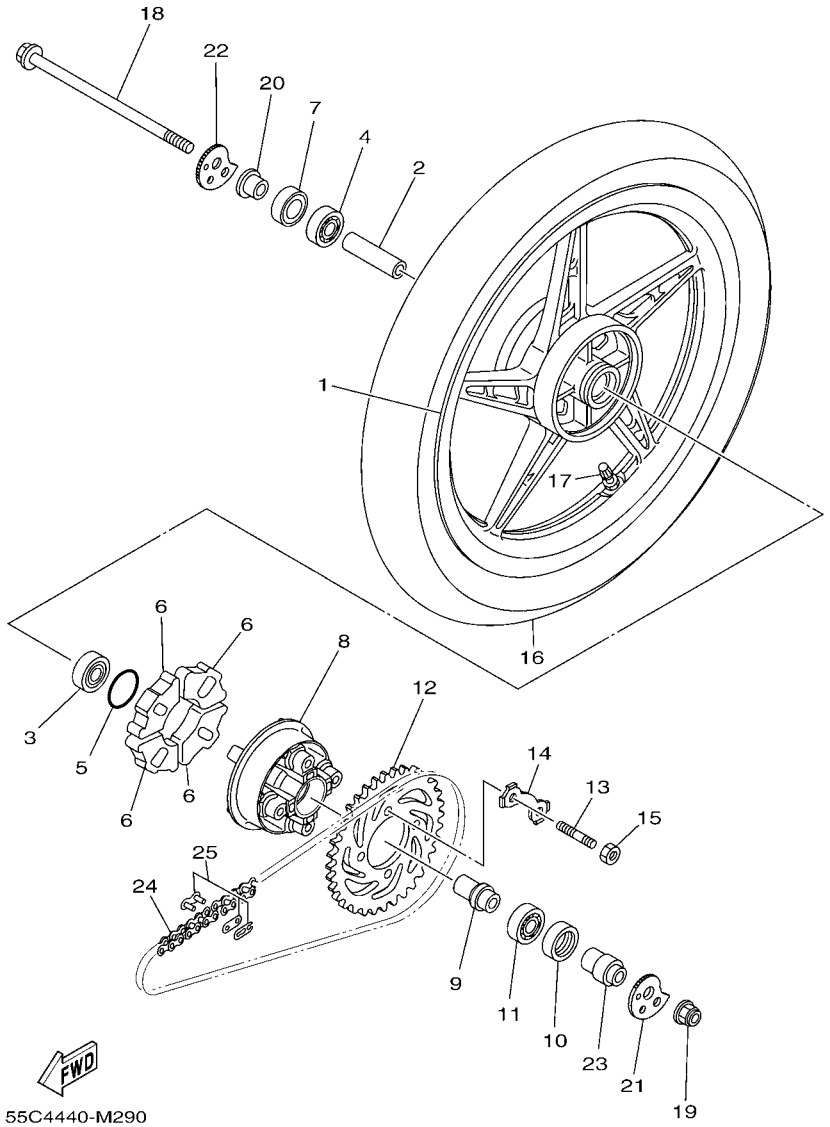

FIG. 29 REAR WHEEL

REF. NO.	PART NO.	DESCRIPTION	55C5					REMARKS
25	94668–84001	JOINT, CHAIN (RK-M 428M)	1					

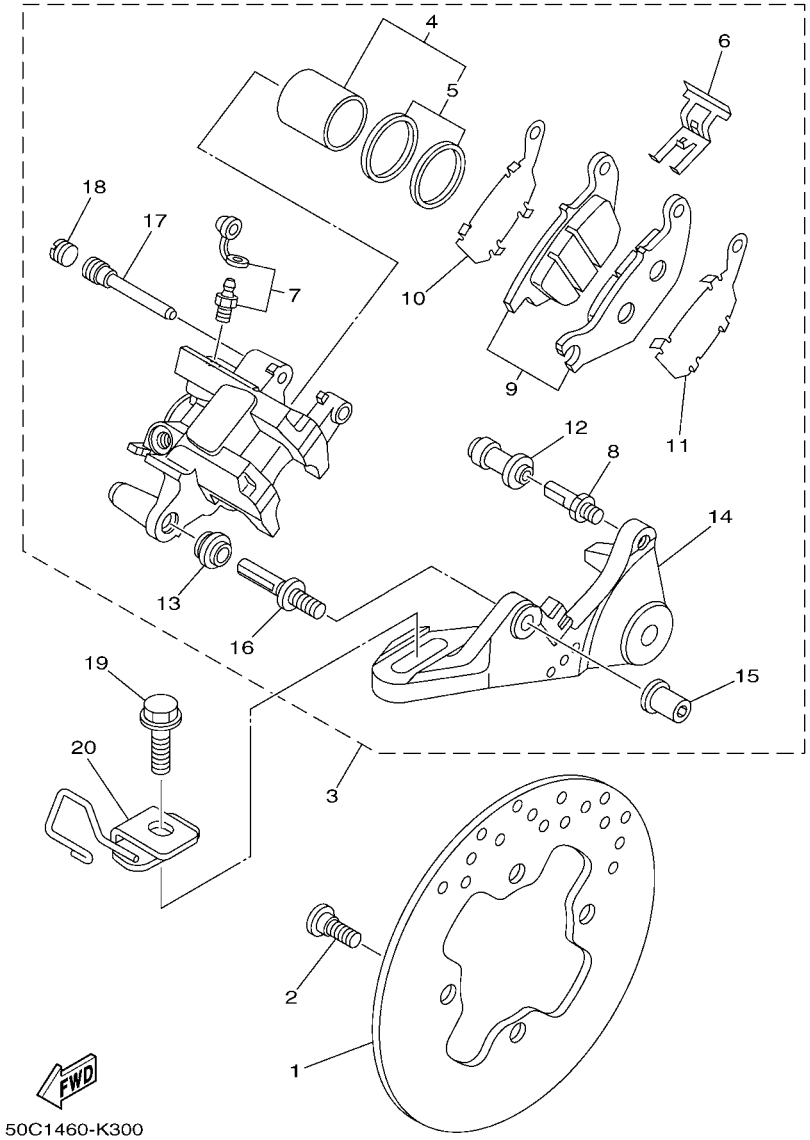

FIG. 30 REAR BRAKE CALIPER

REF. NO.	PART NO.	DESCRIPTION	55C5					REMARKS
1	4S3–F582W–00	DISK, REAR BRAKE 2	1					
2	90109–08015	BOLT	4					
3	55P–F580W–00	CALIPER ASSY, REAR 2	1					
4	50C–W0057–00	.PISTON ASSY, CALIPER	1					
5	3GD–W0047–00	..CALIPER SEAL KIT	1					
6	4S3–F5919–00	.SUPPORT, PAD	1					
7	1UY–W0048–50	.BLEED SCREW KIT	1					
8	55P–F5914–00	.PIN, SLIDE	1					
9	55P–W0046–00	.BRAKE PAD KIT 2	1					
10	4S3–F5827–00	.SHIM, CALIPER	1					
11	4S3–F5828–00	.SHIM, CALIPER	1					
12	1UY–F5937–51	.BOOT 2	1					
13	3JD–F5917–00	.BOOT, CALIPER	1					
14	55P–F5921–00	.BRACKET, SUPPORT	1					
15	55P–F5961–00	.NUT	1					
16	55P–F536G–00	.PIN	1					
17	55P–F5933–00	.WASHER, PAD PIN	1					
18	55P–F5916–00	.PLUG	1					
19	95827–10035	BOLT, FLANGE	1					
20	55C–F2167–00	GUIDE	1					

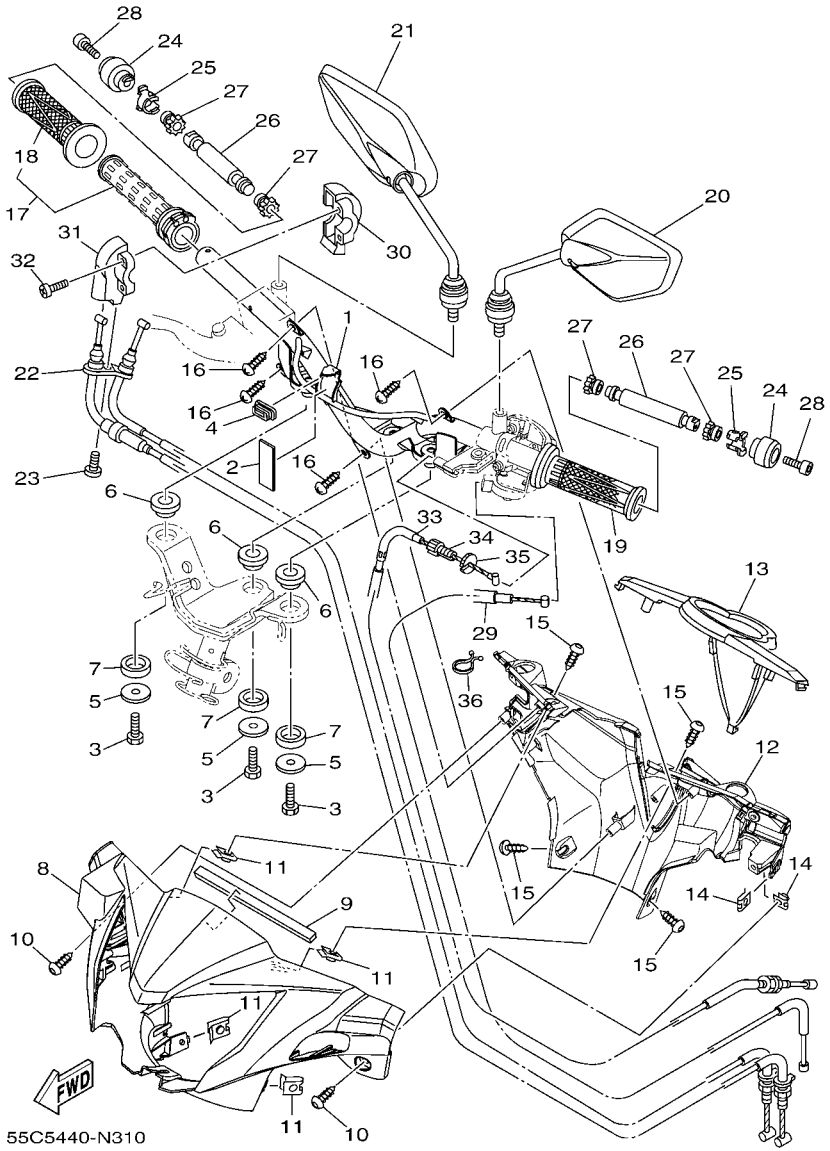

FIG. 31 STEERING HANDLE & CABLE

REF. NO.	PART NO.	DESCRIPTION	55C5					REMARKS
1	55C–F6210–00	HANDLE	1					
2	90520–02813	DAMPER, PLATE	1					
3	97007–08016	BOLT	3					
4	55C–F6326–00	GROMMET	1					
5	90201–08612	WASHER, PLATE	3					
6	1S8–F8217–00	DAMPER 1	3					
7	1S8–F8227–00	DAMPER 2	3					
8	55C–F6143–00–P0	COVER, HANDLE UPPER 1	1					UR FOR S3,SMX
	55C–F6143–00–P4	COVER, HANDLE UPPER 1	1					UR FOR DBNM9
9	90520–04805	DAMPER, PLATE	1					
10	97707–50014	SCREW, TRUSS HEAD TAPPING	2					
11	90183–05042	NUT, SPRING	4					
12	55C–F6145–00	COVER, HANDLE UPPER 2	1					
13	55C–H3559–00–P2	COVER, METER	1					UR BMC FOR S3
	55C–H3559–00–P1	COVER, METER	1					UR FOR SMX
	55C–H3559–00–P3	COVER, METER	1					UR FOR DBNM9
14	90183–05042	NUT, SPRING	2					
15	97707–50014	SCREW, TRUSS HEAD TAPPING	4					
16	97707–50012	SCREW, TRUSS HEAD TAPPING	4					
17	55C–F6240–00	GRIP ASSY	1					
18	1S8–F6242–00	.GRIP (RIGHT)	1					
19	1S8–F6241–00	GRIP	1					
20	55C–F6280–00	REAR VIEW MIRROR ASSY (LEFT)	1					
21	55C–F6290–00	REAR VIEW MIRROR ASSY (RIGHT)	1					
22	55C–F6301–10	THROTTLE CABLE ASSY	1					
23	98507–05016	SCREW, PAN HEAD	1					
24	55C–F6246–00	END, GRIP	2					

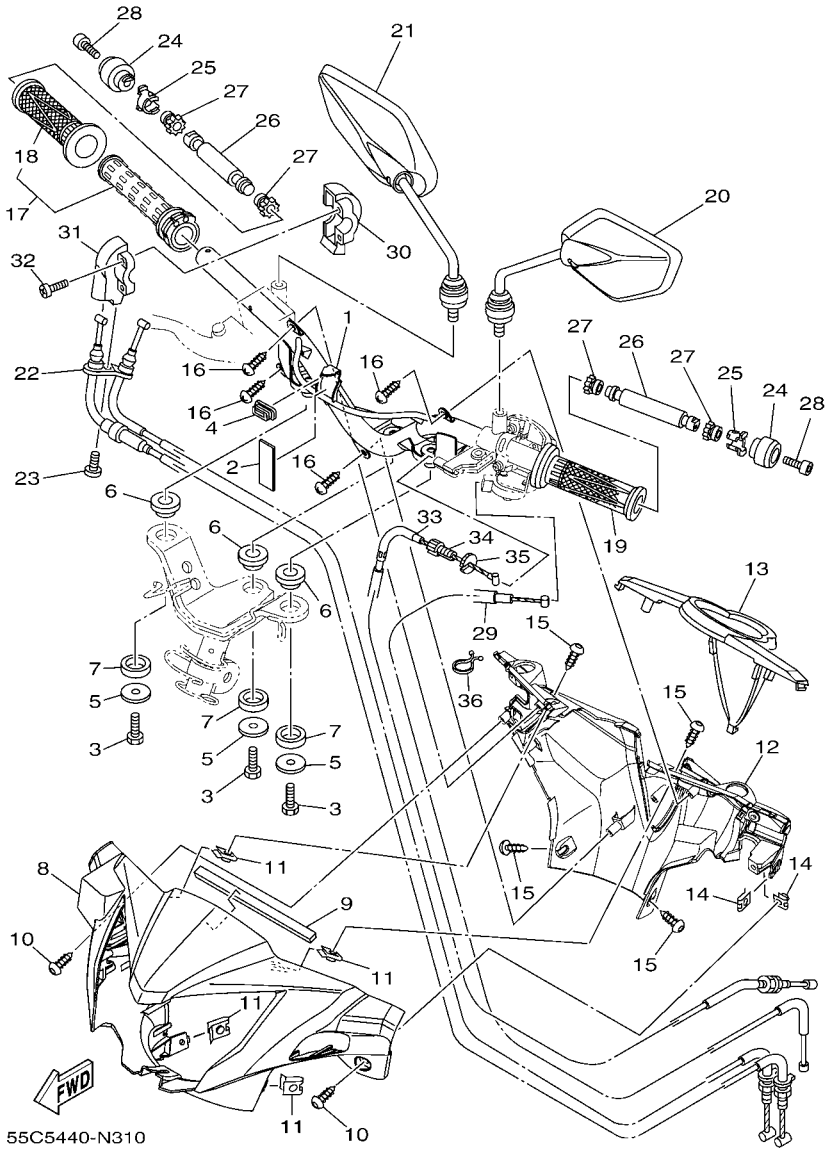

FIG. 31 STEERING HANDLE & CABLE

REF. NO.	PART NO.	DESCRIPTION	55C5					REMARKS
25	5YP–F6257–00	STOPPER	2					
26	55C–F622H–00	WEIGHT	2					
27	1S8–F622F–00	DAMPER, LOCATING 1	4					
28	91317–06030	BOLT	2					
29	55C–F6331–10	CABLE, STARTER 1	1					
30	5P2–F6281–00	CAP, GRIP UPPER	1					
31	5P2–F6282–00	CAP, GRIP UNDER	1					
32	98507–05025	SCREW, PAN HEAD	2					
33	55C–F6335–10	CABLE, CLUTCH	1					
34	90123–08046	BOLT	1					
35	90170–08401	NUT	1					
36	90464–23811	CLAMP	1					

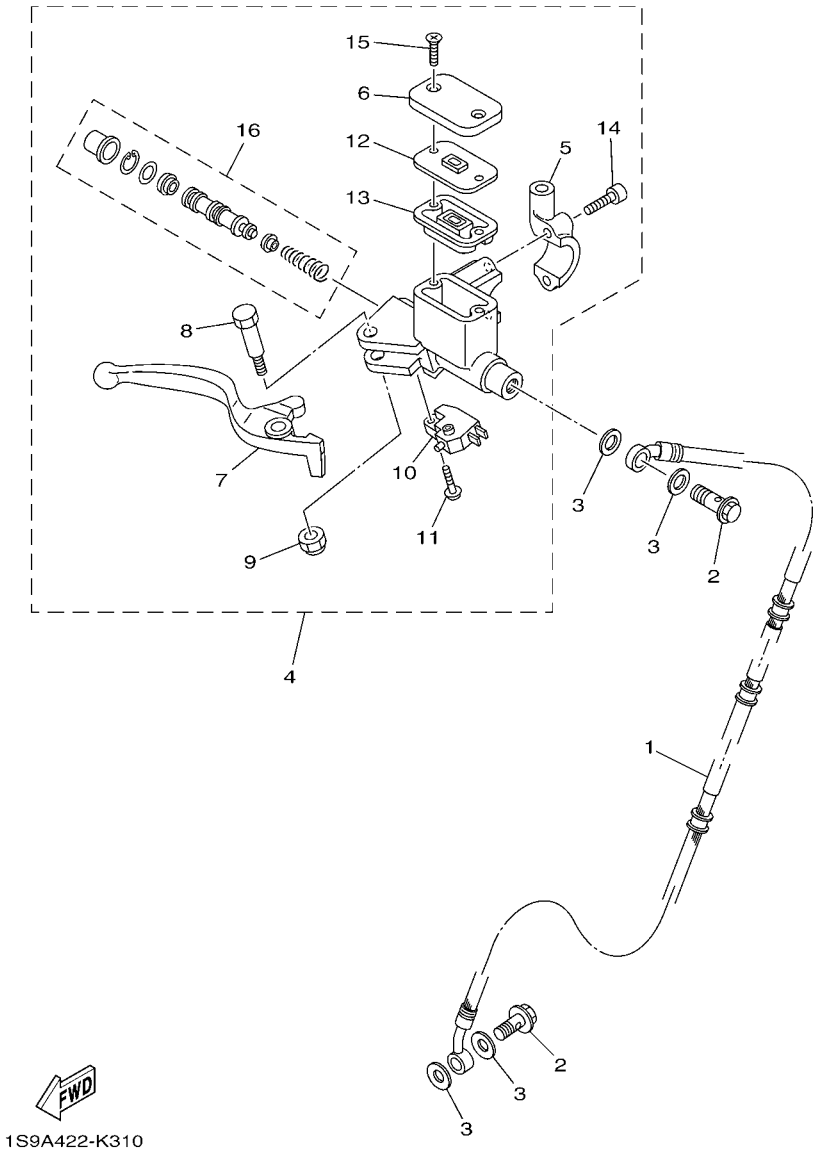

FIG. 32 FRONT MASTER CYLINDER

REF. NO.	PART NO.	DESCRIPTION	55C5					REMARKS
1	55C–F5872–10	HOSE, BRAKE 1	1					
2	90401–10812	BOLT, UNION	2					
3	90201–10118	WASHER, PLATE	4					
4	5YP–F583T–10	MASTER CYLINDER ASSY	1					
5	5YP–F5867–10	.BRACKET, MASTER CYLINDER	1					
6	5HV–F5852–00	.CAP, RESERVOIR	1					
7	5YP–H3922–10	.LEVER 2	1					
8	90109–06848	.BOLT	1					
9	9560M–06100	.NUT, U	1					
10	5LW–H3980–00	.FRONT STOP SWITCH ASSY	1					
11	9760L–04212	.SCREW, PAN HEAD	1					
12	5HV–F585B–10	.PLATE, DIAPHRAGM	1					
13	5HV–F5854–10	.DIAPHRAGM, RESERVOIR	1					
14	5LW–F6332–00	.BOLT	2					
15	9870M–04012	.SCREW, FLAT HEAD	2					
16	5YP–W0041–00	.CYLINDER KIT, MASTER	1					

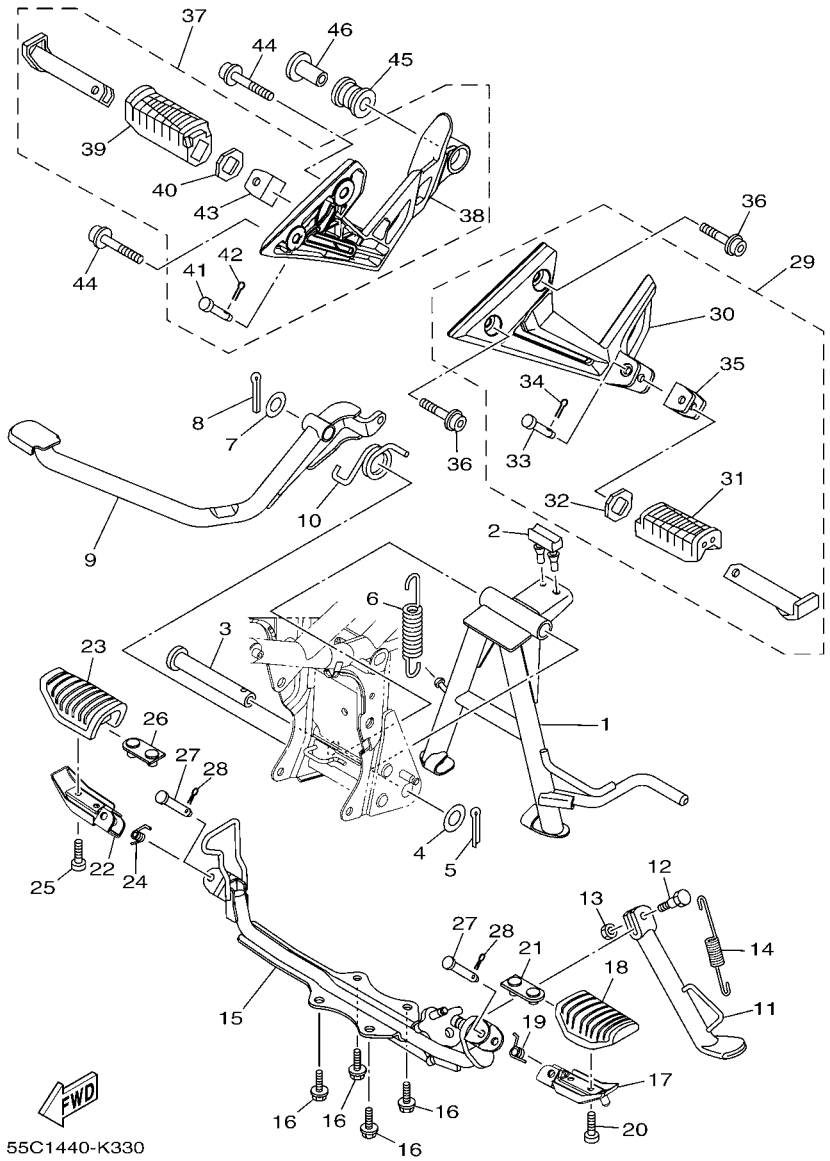

FIG. 33 STAND & FOOTREST

REF. NO.	PART NO.	DESCRIPTION	55C5					REMARKS
1	55C–F7111–00	STAND, MAIN	1					
2	1S8–F7114–00	STOPPER, MAIN STAND	1					
3	5YP–F7112–00	SHAFT, MAIN STAND	1					
4	90201–163H8	WASHER, PLATE	1					
5	91401–30030	PIN, COTTER	1					
6	90506–35812	SPRING, TENSION	1					
7	90201–14811	WASHER, PLATE	1					
8	91401–30030	PIN, COTTER	1					
9	55C–F7211–00	PEDAL, BRAKE	1					
10	90506–20041	SPRING, TENSION	1					
11	1S8–F7311–00	STAND, SIDE	1					
12	90109–08034	BOLT	1					
13	95307–08700	NUT	1					
14	90506–23804	SPRING, TENSION	1					
15	55C–F7411–00	FOOTREST 1	1					
16	95827–08016	BOLT, FLANGE	4					
17	55C–F7451–01	FOOTREST	1					
18	5AB–F7413–00	COVER, FOOTREST	1					
19	90508–20023	SPRING, TORSION	1					
20	91317–06012	BOLT	2					
21	5AB–F7425–00	BRACKET, FOOTREST 2	1					
22	55C–F7461–01	FOOTREST	1					
23	5AB–F7413–00	COVER, FOOTREST	1					
24	90508–20631	SPRING, TORSION	1					
25	91317–06012	BOLT	2					
26	5AB–F7425–00	BRACKET, FOOTREST 2	1					
27	90240–08084	PIN, CLEVIS	2					

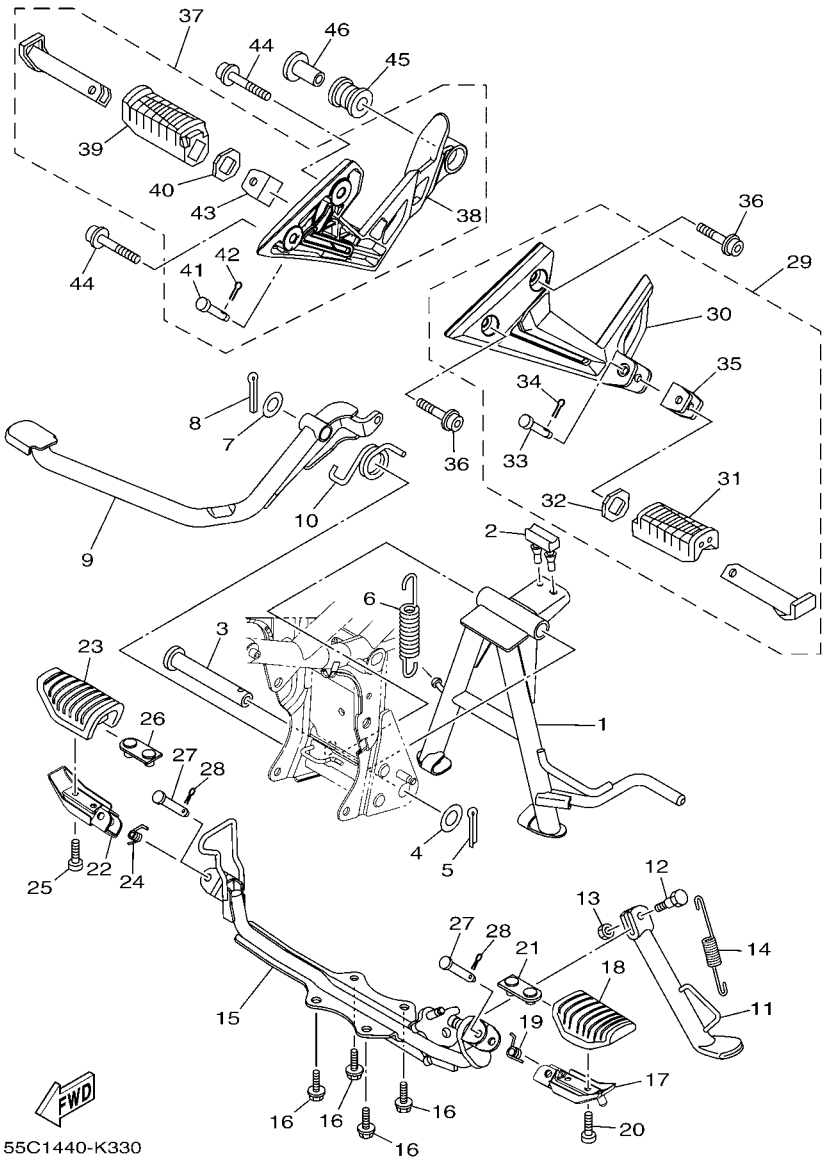

FIG. 33 STAND & FOOTREST

REF. NO.	PART NO.	DESCRIPTION	55C5					REMARKS
28	90252–23800	PIN, COTTER	2					
29	55C–F7430–00–P1	REAR FOOTREST ASSY 1	1					SMX FOR S3,DBNM9
	55C–F7430–00–P2	REAR FOOTREST ASSY 1	1					MBL2 FOR SMX
30	55C–F7452–00–P1	.BRACKET, FOOTREST 1	1					SMX FOR S3,DBNM9
	55C–F7452–00–P2	.BRACKET, FOOTREST 1	1					MBL2 FOR SMX
31	5BU–F7433–00	.COVER, REAR FOOTREST	1					
32	5BU–F7445–00	.PLATE 1	1					
33	90240–08145	.PIN, CLEVIS	1					
34	90252–23800	.PIN, COTTER	1					
35	5TF–F7314–00	.STOPPER	1					
36	90110–08199	BOLT, HEXAGON SOCKET HEAD	2					
37	55C–F7440–00–P1	REAR FOOTREST ASSY 2	1					SMX FOR S3,DBNM9
	55C–F7440–00–P2	REAR FOOTREST ASSY 2	1					MBL2 FOR SMX
38	55C–F7462–00–P1	.BRACKET, FOOTREST 2	1					SMX FOR S3,DBNM9
	55C–F7462–00–P2	.BRACKET, FOOTREST 2	1					MBL2 FOR SMX
39	5BU–F7444–00	.COVER, REAR FOOTREST	1					
40	5BU–F7445–00	.PLATE 1	1					
41	90240–08145	.PIN, CLEVIS	1					
42	90252–23800	.PIN, COTTER	1					
43	5TF–F7314–00	.STOPPER	1					
44	90110–08199	BOLT, HEXAGON SOCKET HEAD	2					
45	5TF–F7424–00	DAMPER, FOOTREST 2	1					
46	90387–10805	COLLAR	1					

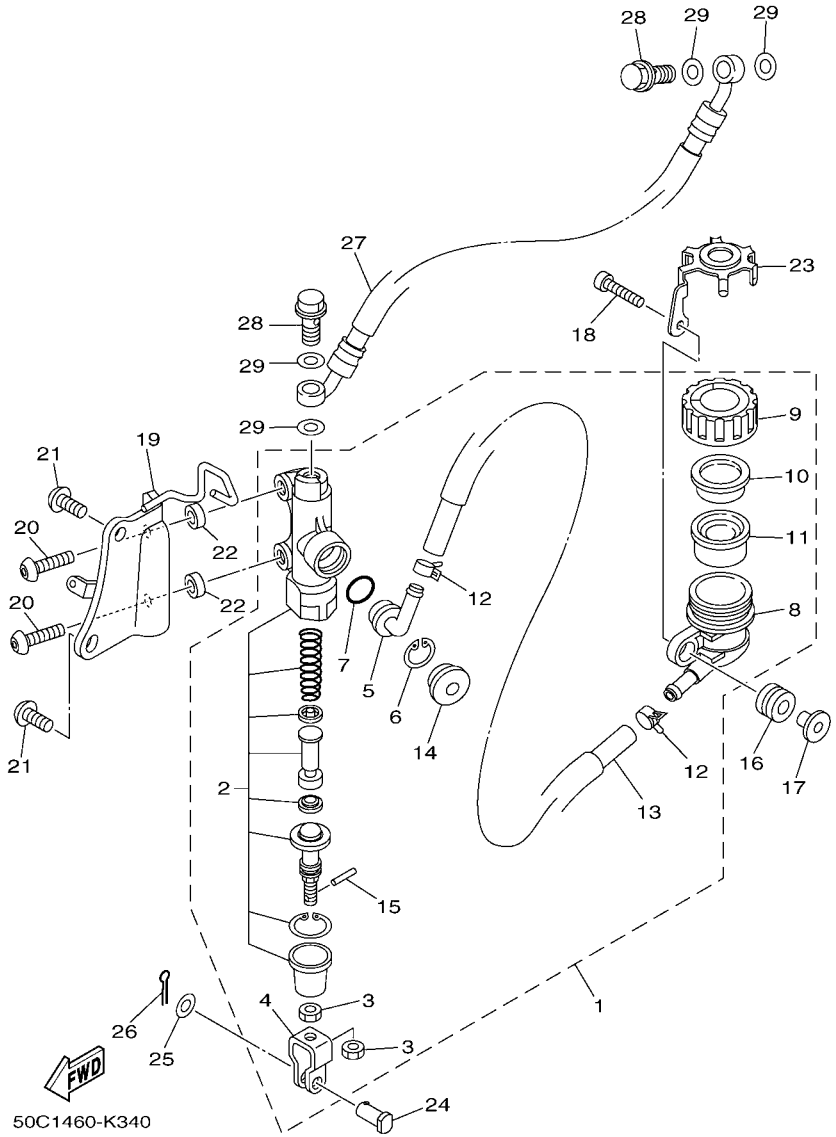

FIG. 34 REAR MASTER CYLINDER

REF. NO.	PART NO.	DESCRIPTION	55C5					REMARKS
1	55P–F583V–00	RR. MASTER CYLINDER ASSY.	1					
2	55P–W0042–00	.CYLINDER KIT, MASTER	1					
3	95301–08700	.NUT	2					
4	2YK–27222–00	.JOINT	1					
5	4ML–F582A–50	.JOINT	1					
6	2VN–F5866–00	.CIRCLIP	1					
7	93210–15620	.O-RING	1					
8	50C–F5894–10	.TANK, RESERVOIR	1					
9	50C–F5852–00	.CAP, RESERVOIR	1					
10	2VN–F5855–00	.BUSH,DIAPHRAGM	1					
11	2VN–F5854–00	.DIAPHRAGM, RESERVOIR	1					
12	90467–12085	.CLIP	2					
13	50C–25895–00	.HOSE, RESERVOIR	1					
14	3FV–F589A–00	.COVER, DUST	1					
15	5BU–27234–00	.PIN, BRAKE ROD	1					
16	55C–F4742–00	GROMMET	1					
17	55C–F6259–00	COLLAR	1					
18	98507–06025	SCREW, PAN HEAD	1					
19	50C–F133F–00	BRACKET, MASTER CYLINDER	1					
20	92017–08025	BOLT, BUTTON HEAD	2					
21	92017–08016	BOLT, BUTTON HEAD	2					
22	90387–085E1	COLLAR	2					
23	55C–F5888–00	COVER, RESERVOIR TANK	1					
24	90240–08124	PIN, CLEVIS	1					
25	90201–08083	WASHER, PLATE	1					
26	91401–16012	PIN, COTTER	1					
27	50C–F5873–00	HOSE, BRAKE 2	1					

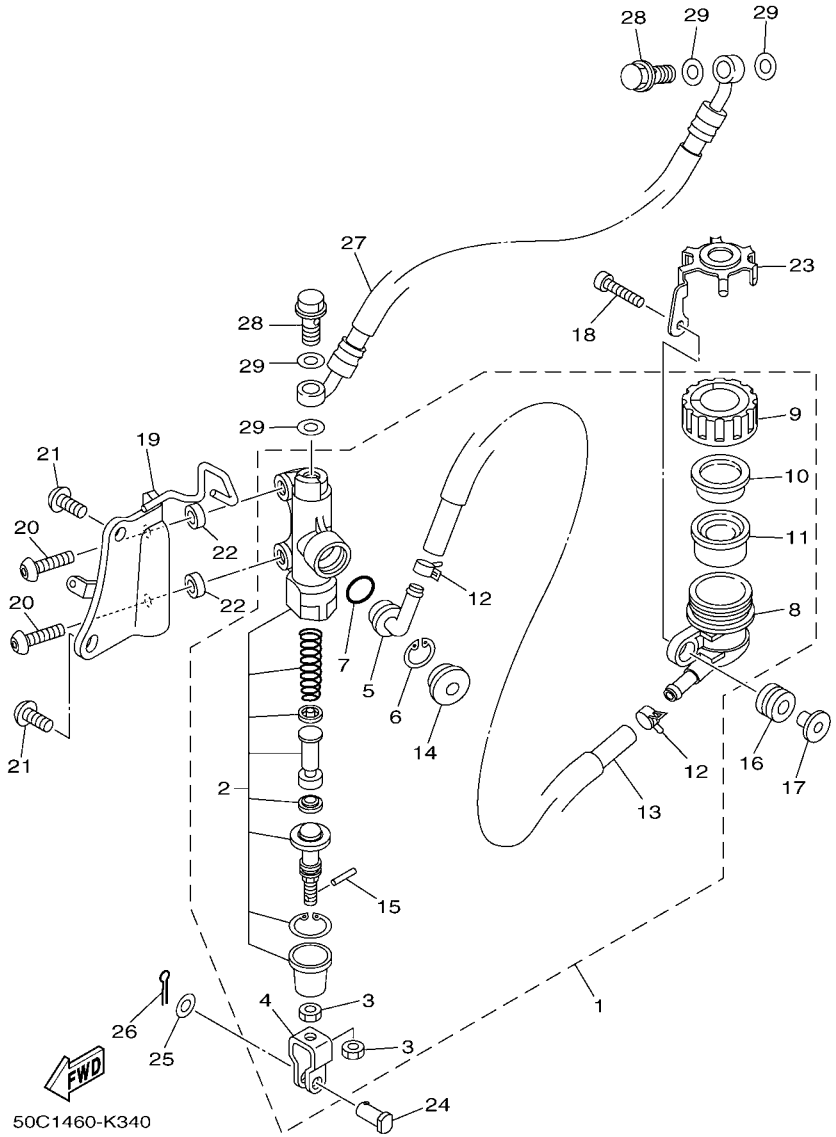

FIG. 34 REAR MASTER CYLINDER

REF. NO.	PART NO.	DESCRIPTION	55C5					REMARKS
28	90401–10812	BOLT, UNION	2					
29	90201–10118	WASHER, PLATE	4					

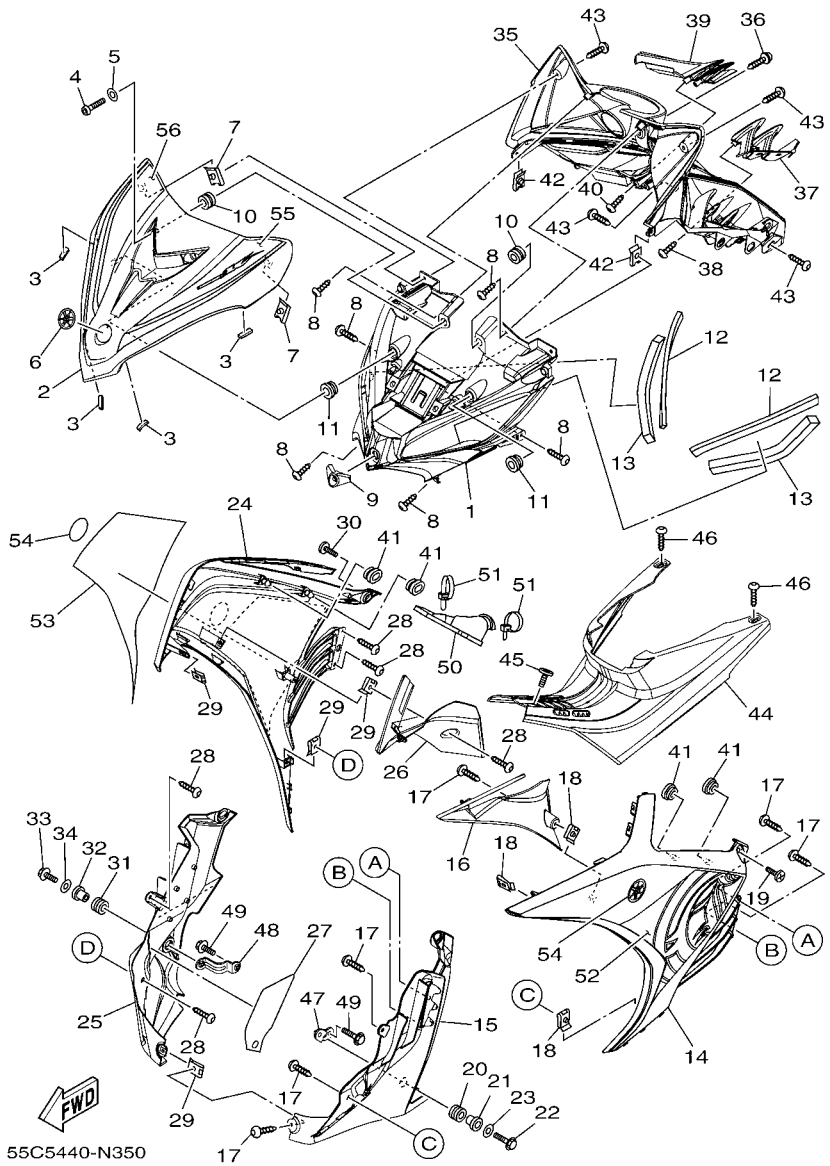

FIG. 35 LEG SHIELD

REF. NO.	PART NO.	DESCRIPTION	55C5					REMARKS
1	55C–F3391–10	PANEL, FRONT	1					
2	55C–F8345–10–P0	MOLE 1	1					UR SMX FOR S3,SMX
	55C–F8345–10–P1	MOLE 1	1					UR FOR DBNM9
3	55C–F844E–00	SEAL 3	4					
4	92017–06012	BOLT, BUTTON HEAD	2					
5	90201–06822	WASHER, PLATE	2					
6	5VW–F313B–00	EMBLEM, 1	1					
7	90183–05042	NUT, SPRING	2					
8	97707–50014	SCREW, TRUSS HEAD TAPPING	6					
9	55C–F8187–00	GROMMET	1					
10	90480–13807	GROMMET	2					
11	90480–13867	GROMMET	2					
12	90520–05806	DAMPER, PLATE	2					
13	90520–10810	DAMPER, PLATE	2					
14	55C–F8311–00–P4	LEG SHIELD 1	1					FOR S3
	55C–F8311–00–P0	LEG SHIELD 1	1					SMX FOR SMX,DBNM9
15	55C–F835J–00	BODY, FRONT LOWER 1	1					
16	55C–F137U–00	GUIDE, AIR 1	1					
17	97707–50014	SCREW, TRUSS HEAD TAPPING	6					
18	90183–05042	NUT, SPRING	3					
19	90150–06021	SCREW, ROUND HEAD	1					
20	90480–18418	GROMMET	1					
21	90387–09801	COLLAR	1					
22	95807–06020	BOLT, FLANGE	1					
23	90201–06557	WASHER, PLATE	1					
24	55C–F8312–00–P4	LEG SHIELD 2	1					FOR S3
	55C–F8312–00–P0	LEG SHIELD 2	1					SMX FOR SMX,DBNM9

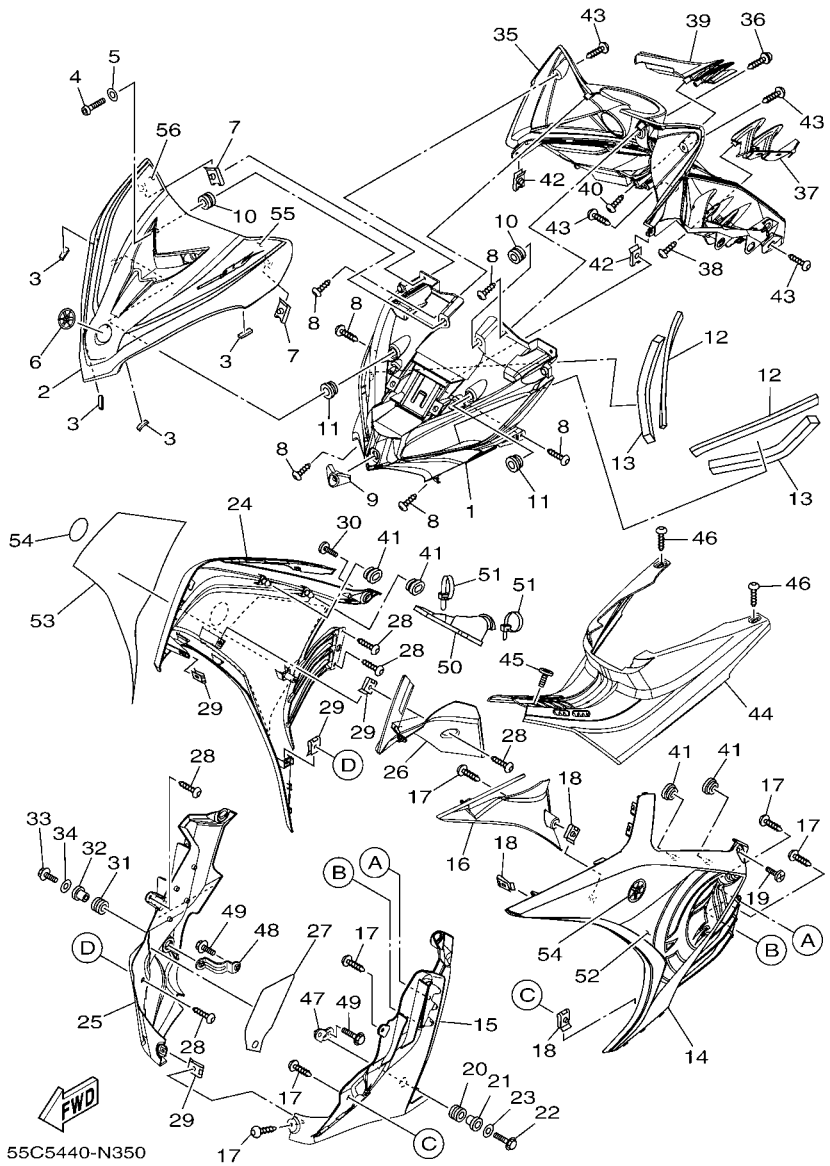

FIG. 35 LEG SHIELD

REF. NO.	PART NO.	DESCRIPTION	55C5					REMARKS
25	55C–F835K–00	BODY, FRONT UNDER 2	1					
26	55C–F137V–00	GUIDE, AIR 2	1					
27	50C–F8307–00	SEAL	1					
28	97707–50014	SCREW, TRUSS HEAD TAPPING	5					
29	90183–05042	NUT, SPRING	4					
30	90150–06021	SCREW, ROUND HEAD	1					
31	90480–18418	GROMMET	1					
32	90387–09801	COLLAR	1					
33	95807–06020	BOLT, FLANGE	1					
34	90201–06557	WASHER, PLATE	1					
35	55C–F836K–00	PANEL, INNER 1	1					
36	90159–06181	SCREW, WITH WASHER	1					
37	55C–F8273–00	FIN 1	1					
38	97707–50012	SCREW, TRUSS HEAD TAPPING	2					
39	55C–F8274–00	FIN 2	1					
40	97707–50012	SCREW, TRUSS HEAD TAPPING	2					
41	90480–01813	GROMMET	4					
42	90183–05042	NUT, SPRING	2					
43	97707–50014	SCREW, TRUSS HEAD TAPPING	4					
44	55C–F842N–00	COVER 2	1					
45	90150–06021	SCREW, ROUND HEAD	1					
46	97707–50014	SCREW, TRUSS HEAD TAPPING	2					
47	55C–F8321–00	STAY 1	1					
48	55C–F8322–00	STAY 2	1					
49	95807–06020	BOLT, FLANGE	2					
50	1S8–F8336–00	PLATE	1					
51	90464–50801	CLAMP	2					

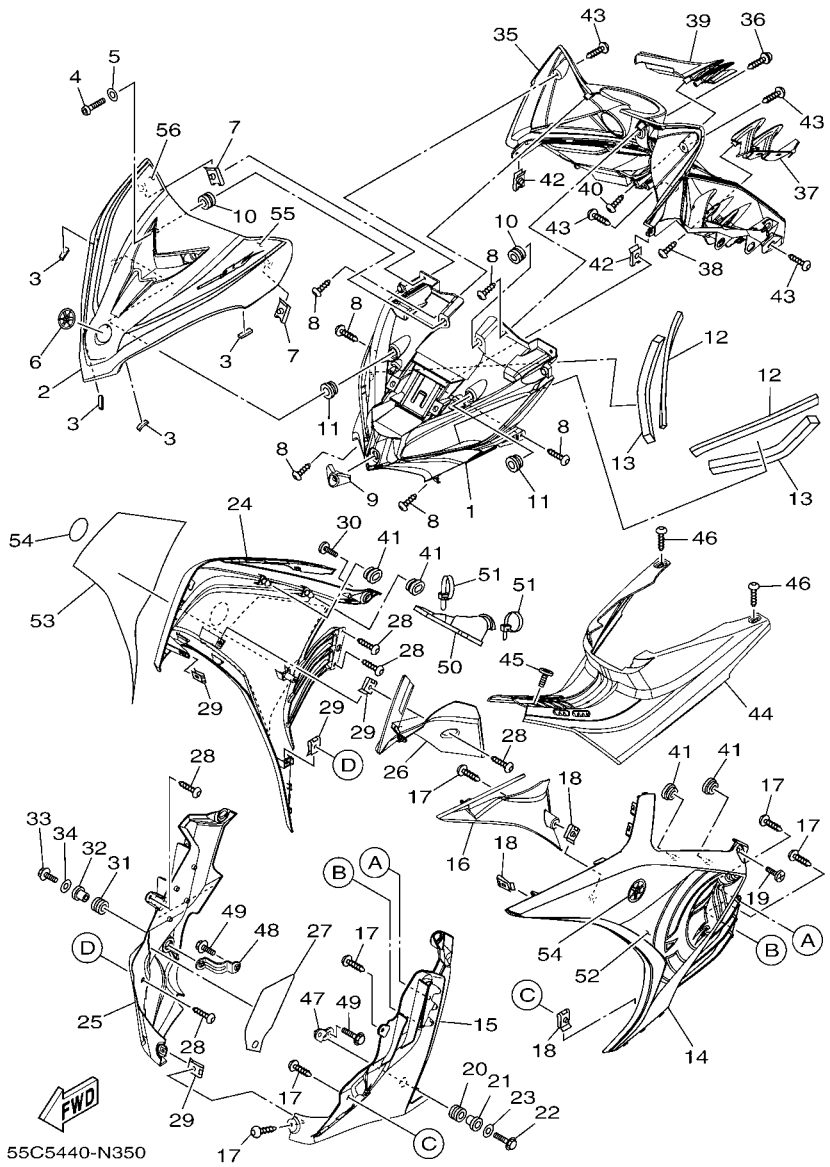

FIG. 35 LEG SHIELD

REF. NO.	PART NO.	DESCRIPTION	55C5					REMARKS
52	55C–F8391–50	GRAPHIC 1	1					UR FOR S3
	55C–F8391–60	GRAPHIC 1	1					UR FOR SMX
	55C–F8391–70	GRAPHIC 1	1					UR FOR DBNM9
53	55C–F8392–50	GRAPHIC 2	1					UR FOR S3
	55C–F8392–60	GRAPHIC 2	1					UR FOR SMX
	55C–F8392–70	GRAPHIC 2	1					UR FOR DBNM9
54	1S8–F175C–00	TUNING FORK MARK	2					
55	55C–F8393–50	GRAPHIC 3	1					UR FOR S3
	55C–F8393–60	GRAPHIC 3	1					UR FOR SMX
	55C–F8393–70	GRAPHIC 3	1					UR FOR DBNM9
56	55C–F8394–50	GRAPHIC 4	1					UR FOR S3
	55C–F8394–60	GRAPHIC 4	1					UR FOR SMX
	55C–F8394–70	GRAPHIC 4	1					UR FOR DBNM9

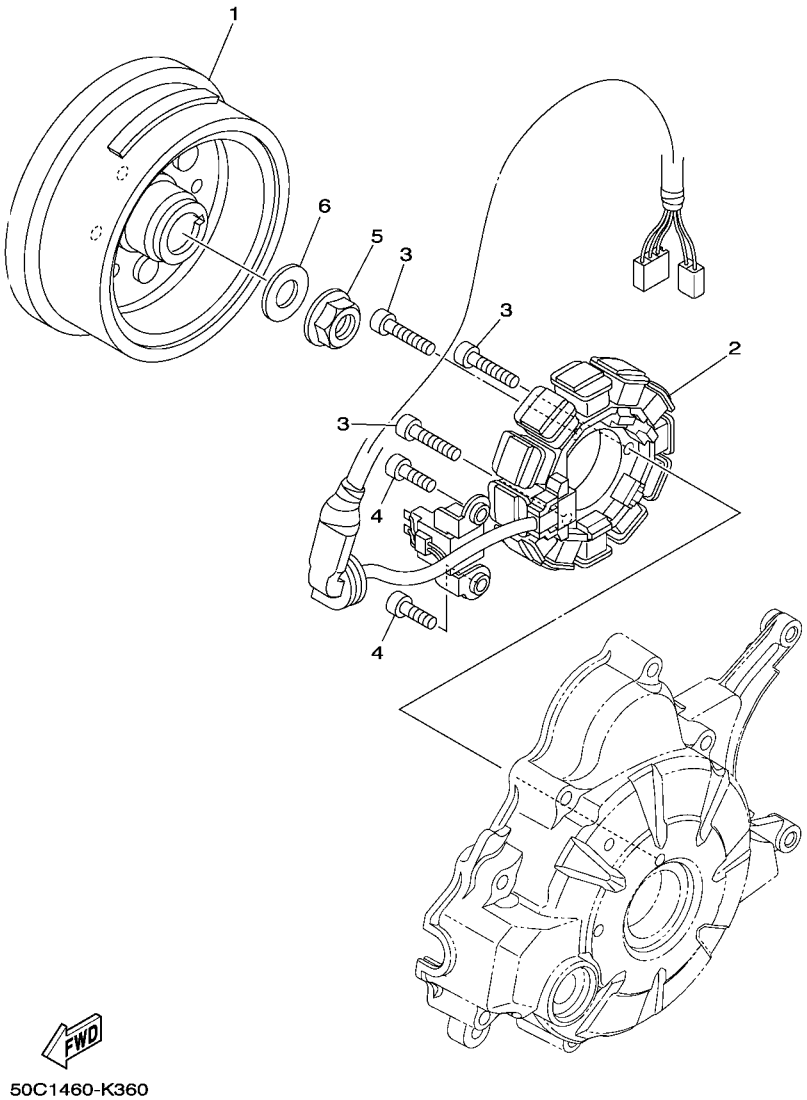

FIG. 36 GENERATOR

REF. NO.	PART NO.	DESCRIPTION	55C5					REMARKS
1	50C–H1450–00	ROTOR ASSY	1					
2	1S7–H1410–01	STATOR ASSY	1					
3	91317–06025	BOLT	3					
4	91317–06016	BOLT	2					
5	95707–12500	NUT, FLANGE	1					
6	90201–122H1	WASHER, PLATE	1					

FIG. 37 STARTING MOTOR

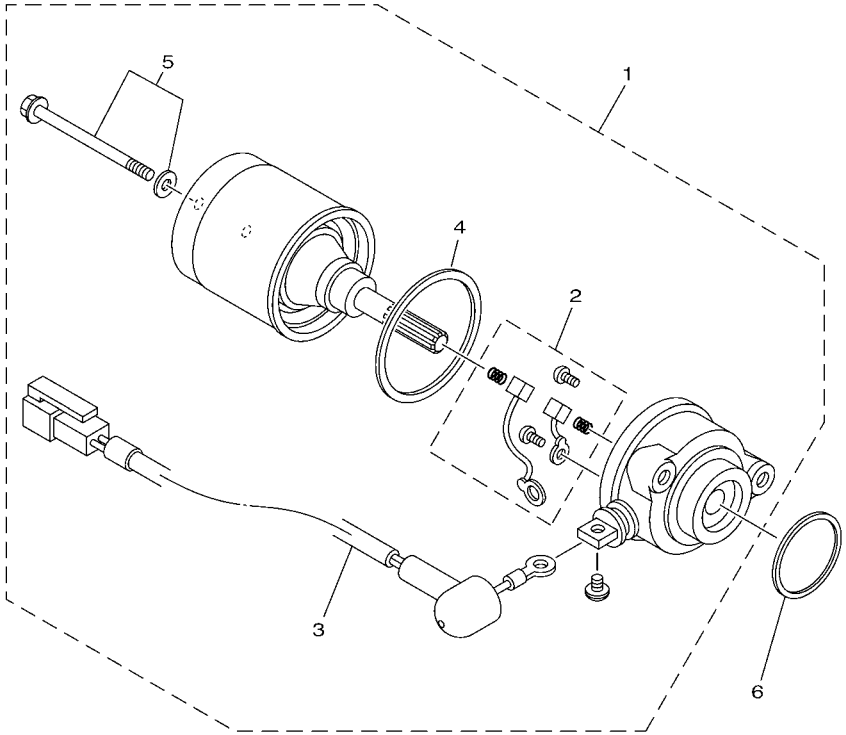

16S1422-H370

REF. NO.	PART NO.	DESCRIPTION	55C5					REMARKS
1	50C–H1800–03	STARTING MOTOR ASSY	1					
2	5TP–H1801–00	.BRUSH SET	1					
3	50C–H183G–00	.CORD COMP.	1					
4	5D9–H1861–00	.GASKET	1					
5	5D9–H1828–00	.SCREW 2	2					
6	93210–29803	O-RING	1					

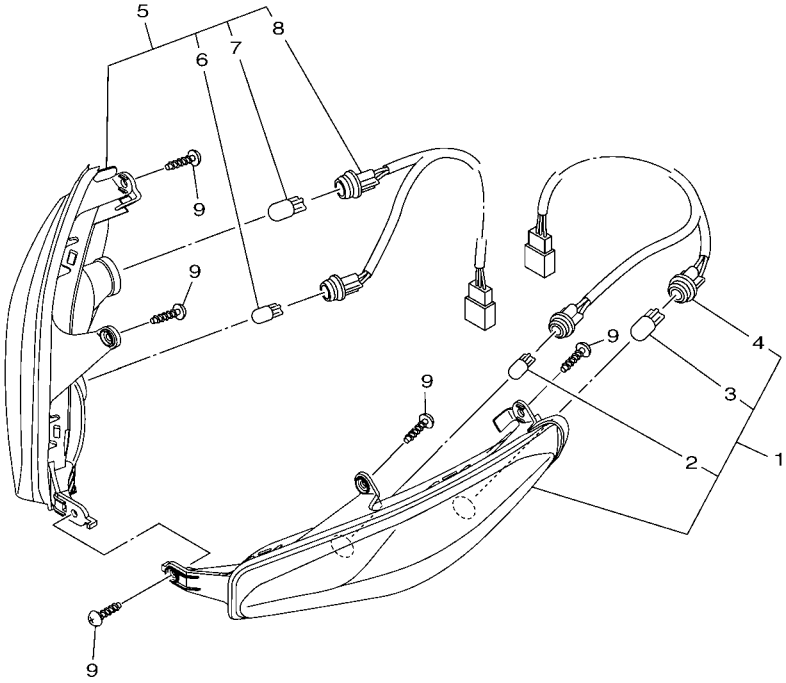

55C5440-N380

FIG. 38 FLASHER LIGHT

REF. NO.	PART NO.	DESCRIPTION	55C5					REMARKS
1	55C–H3310–10	FRONT FLASHER LIGHT ASSY 1	1					
2	31B–H5353–00	.BULB (12V-5W)	1					
3	5D6–H3311–00	.BULB, FLASHER (12V-16W)	1					
4	55C–H331E–10	.CORD ASSY	1					
5	55C–H3320–10	FRONT FLASHER LIGHT ASSY 2	1					
6	31B–H5353–00	.BULB (12V-5W)	1					
7	5D6–H3311–00	.BULB, FLASHER (12V-16W)	1					
8	55C–H332E–10	.CORD ASSY	1					
9	97707–50016	SCREW, TRUSS HEAD TAPPING	5					

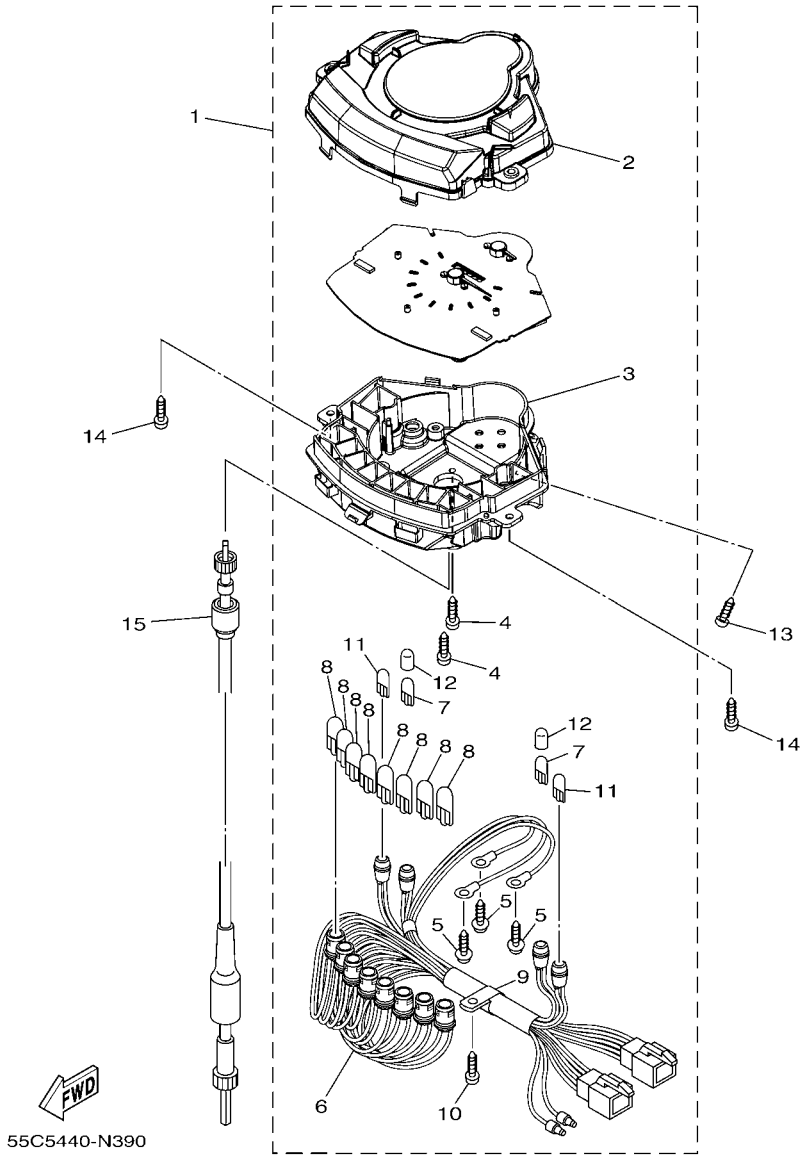

FIG. 39 METER

REF. NO.	PART NO.	DESCRIPTION	55C5					REMARKS
1	55C–H3510–00	SPEEDOMETER ASSY	1					
2	50C–H3511–00	.LENS, SPEEDOMETER	1					
3	50C–H353F–00	.CASE, METER LOWER	1					
4	97602–04310	.SCREW, PAN HEAD WITH WASHER	2					
5	90159–03102	.SCREW, WITH WASHER	3					
6	55C–H3509–00	.SOCKET CORD ASSY	1					
7	2GV–83517–00	.BULB (12V-1.7W T6.5)	2					
8	1YT–83517–00	.BULB (12V-1.7W T10)	8					
9	4NK–8357E–00	.CLAMP	1					
10	97702–40014	.SCREW, TAPPING	1					
11	42X–83517–00	.BULB (12V-3W)	2					
12	50C–H3606–00	.CAP, BULB	2					
13	97707–50016	SCREW, TRUSS HEAD TAPPING	1					
14	97707–50025	SCREW, TAPPING	2					
15	55C–H3550–10	SPEEDOMETER CABLE ASSY	1					

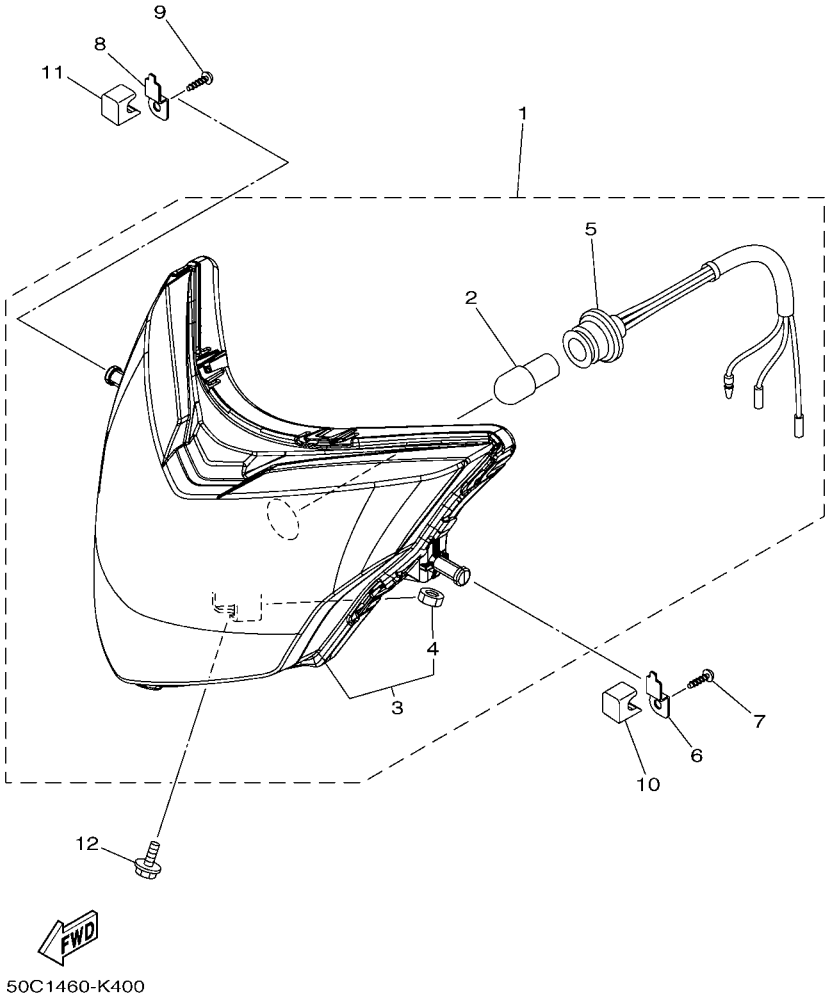

FIG. 40 HEADLIGHT

REF. NO.	PART NO.	DESCRIPTION	55C5					REMARKS
1	50C–H4310–01	HEADLIGHT UNIT ASSY	1					
2	5HV–H4314–00	.BULB (12V-32/32W)	1					
3	50C–H4370–00	.HEADLIGHT UNIT ASSY	1					
4	50C–H4326–00	..NUT	1					
5	50C–H4312–00	.CORD ASSY	1					
6	55C–H4781–00	BRACKET 1	1					
7	97707–50016	SCREW, TRUSS HEAD TAPPING	1					
8	55C–H4782–00	BRACKET 2	1					
9	97707–50016	SCREW, TRUSS HEAD TAPPING	1					
10	55C–H411T–00	HOLDER, 1	1					
11	55C–H411U–00	HOLDER, 2	1					
12	95807–06010	BOLT, FLANGE	1					

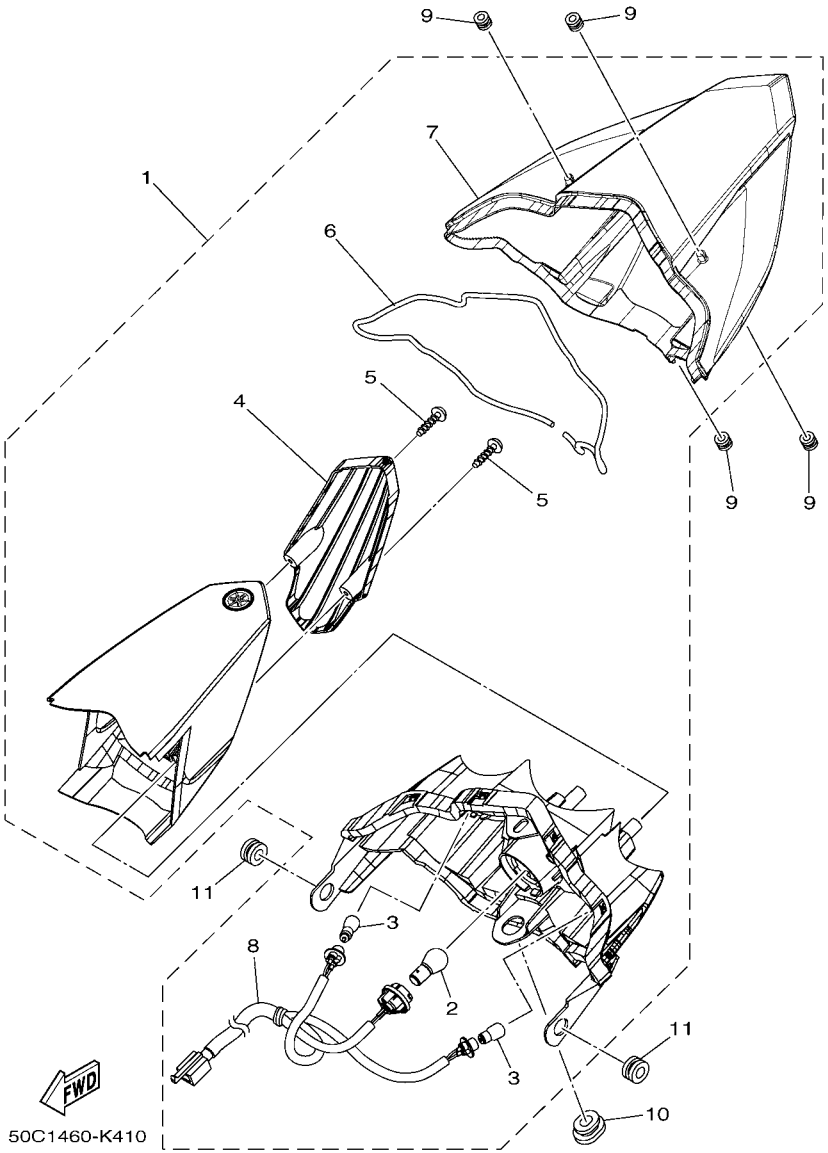

FIG. 41 TAILLIGHT

REF. NO.	PART NO.	DESCRIPTION	55C5					REMARKS
1	50C–H4710–00	TAILLIGHT UNIT ASSY	1					
2	4AC–H4714–00	.BULB (12V-21/5W)	1					
3	5LL–H3311–00	.BULB (12V-10W) AMBER	2					
4	50C–H4721–00	.LENS, TAILLIGHT	1					
5	97707–40616	.SCREW, TAPPING	2					
6	50C–H4723–00	.GASKET, TAIL LENS	1					
7	50C–H4743–00	.LENS, LICENCE LIGHT	1					
8	50C–H4735–00	.SOCKET CORD ASSY	1					
9	55C–H4759–00	GROMMET	4					
10	90480–01868	GROMMET	1					
11	90480–13807	GROMMET	2					

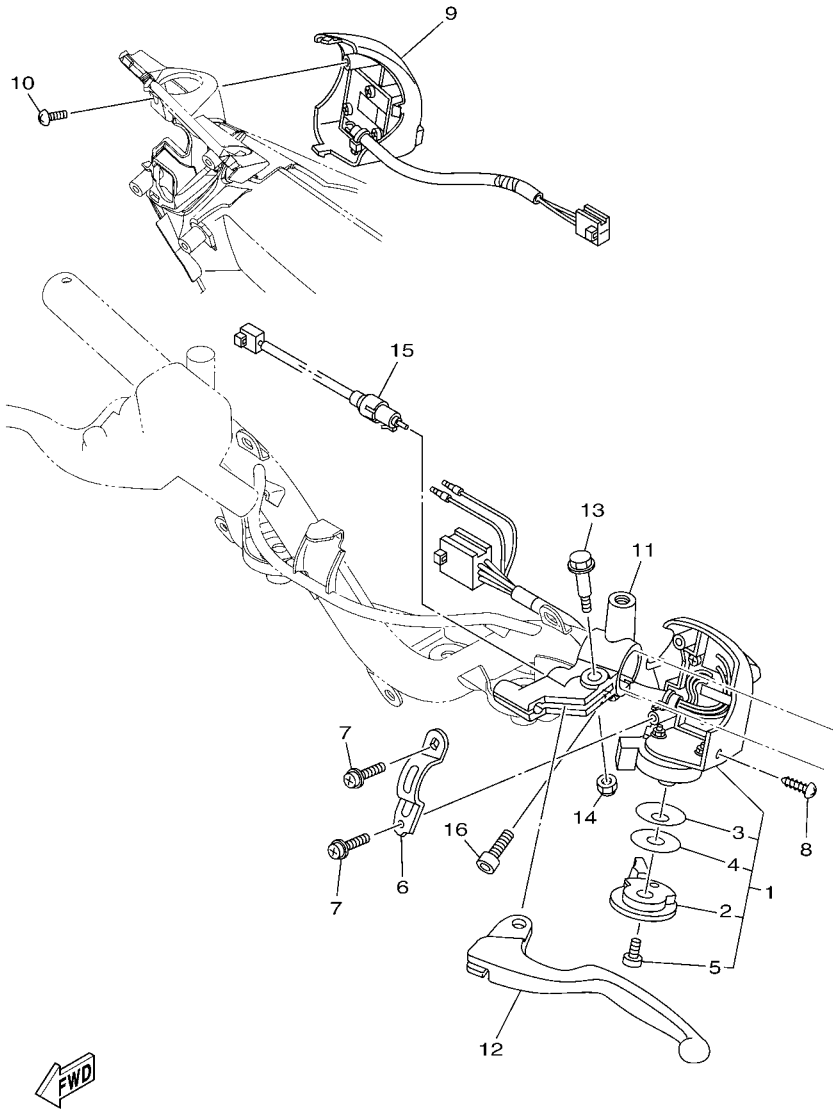

55C5440-N420

FIG. 42 HANDLE SWITCH & LEVER

REF. NO.	PART NO.	DESCRIPTION	55C5					REMARKS
1	1S8–H3973–02	SWITCH, HANDLE 3	1					
2	1S8–H3941–00	.LEVER, STARTER	1					
3	1S8–H3947–00	.SPRING	1					
4	1S8–H397X–00	.SPACER	1					
5	9850L–06008	.SCREW, PAN HEAD	1					
6	1S8–H3955–01	BRACKET 1	1					
7	97607–05216	SCREW,WITH WASHER	2					
8	97707–50012	SCREW, TRUSS HEAD TAPPING	1					
9	55C–H3976–00	SWITCH, HANDLE 1	1					
10	97707–50012	SCREW, TRUSS HEAD TAPPING	1					
11	55P–H2911–00	HOLDER, LEVER 1	1					
12	55P–H3912–00	LEVER 1	1					
13	90109–06827	BOLT	1					
14	95607–06100	NUT, U	1					
15	55P–H2917–00	SWITCH	1					
16	91317–06020	BOLT	1					

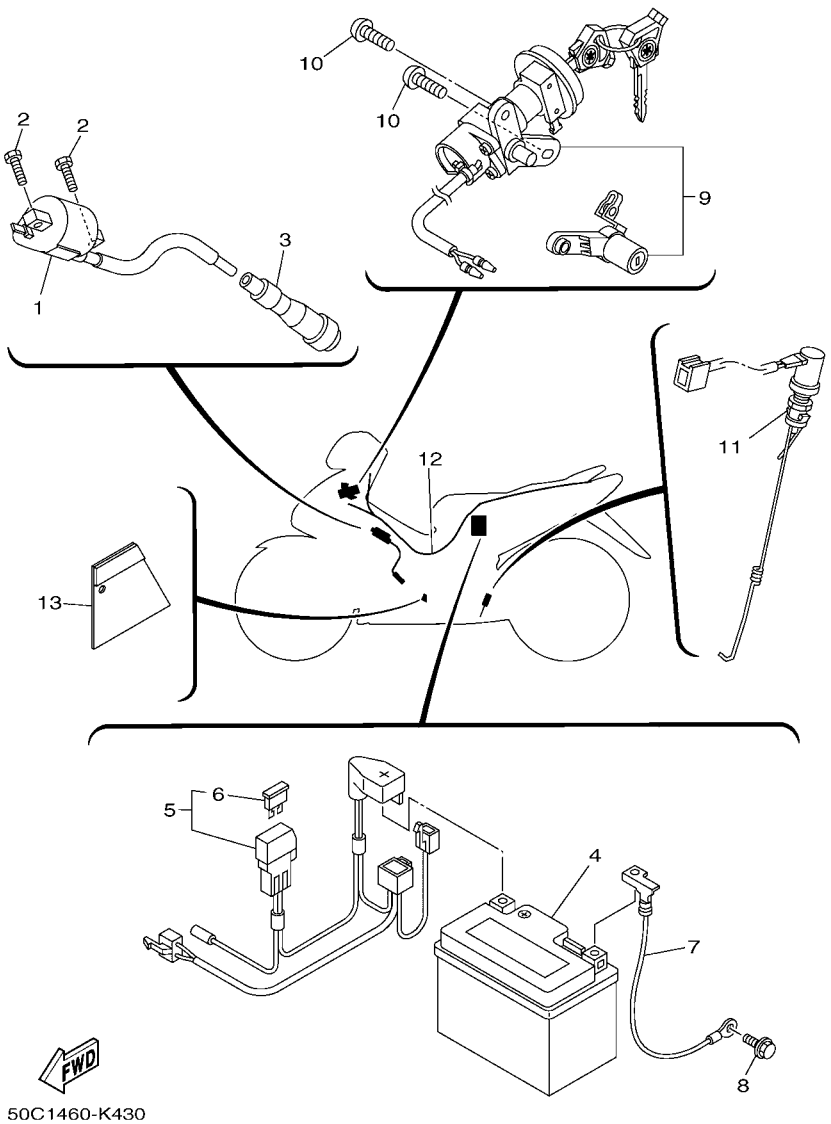

FIG. 43 ELECTRICAL 1

REF. NO.	PART NO.	DESCRIPTION	55C5					REMARKS
1	4US–H2310–20	IGNITION COIL ASSY	1					
2	97007–06016	BOLT	2					
3	1S7–H2370–00	PLUG CAP ASSY	1					
4	10C–H2100–01	BATTERY ASSY (GS GTZ5S)	1					
5	55C–H2150–10	FUSE HOLDER ASSY	1					
6	31D–H2151–00	.FUSE (7.5A)	1					
7	55C–H2116–00	WIRE, MINUS LEAD	1					
8	95027–06010	BOLT, FLANGE	1					
9	55C–XH252–00	MAIN SWITCH SUB ASSY.	1					
10	90149–06309	SCREW	2					
11	4S3–H2530–01	STOP SWITCH ASSY	1					
12	55C–H2590–10	WIRE HARNESS ASSY	1					
13	1S8–F117F–00	COVER	1					

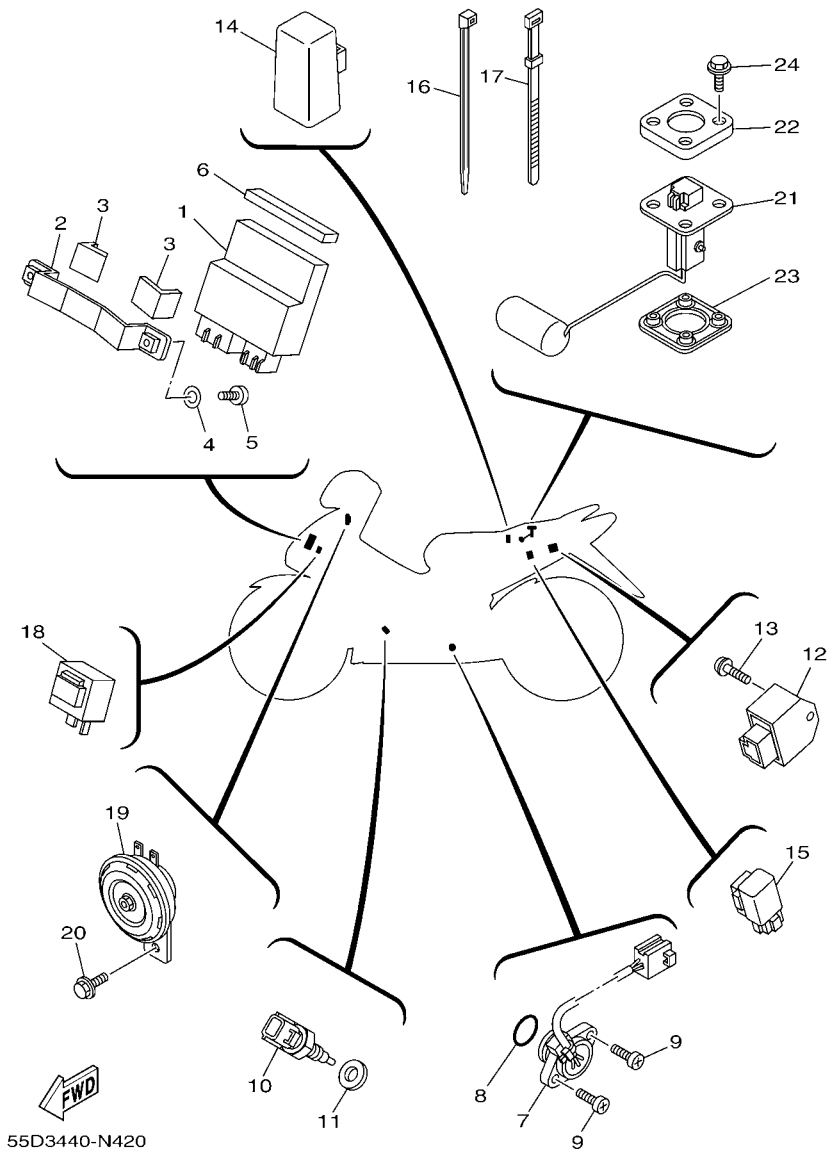

FIG. 44 ELECTRICAL 2

REF. NO.	PART NO.	DESCRIPTION	55C5					REMARKS
1	50C–H5540–01	C.D.I. UNIT ASSY	1					
2	55C–F8426–00	BRACKET 1	1					
3	90520–04804	DAMPER, PLATE	2					
4	90201–06830	WASHER, PLATE	2					
5	98507–06012	SCREW, PAN HEAD	2					
6	90520–96802	DAMPER, PLATE	1					
7	50C–H2540–00	NEUTRAL SWITCH ASSY	1					
8	93210–21801	O-RING	1					
9	98507–05016	SCREW, PAN HEAD	2					
10	5YP–85790–00	THERMOSENSOR ASSY	1					
11	90430–12801	GASKET	1					
12	25D–H1960–00	RECTIFIER & REGULATOR ASSY	1					
13	97607–06212	SCREW,WITH WASHER	1					
14	5TN–H1940–00	STARTER RELAY ASSY	1					
15	5YP–H1950–00	RELAY ASSY	1					
16	90464–50800	CLAMP	6					
17	3AY–H3936–10	BAND, SWITCH CORD	1					
18	1VP–83350–00	FLASHER RELAY ASSY	1					
19	55C–H3371–00	HORN	1					
20	95807–08012	BOLT, FLANGE	1					
21	1S8–H5752–00	SENDER UNIT ASSY, FUEL METER	1					
22	5BU–H5757–00	RETAINER	1					
23	5BU–H5753–01	GASKET, SENDER UNIT	1					
24	90119–05071	BOLT, WITH WASHER	4					

PART NO.	REF. NO.
1S8–11633–01	2 – 12
3C1–11681–10	2 – 3
5YP–12117–00	3 – 6
1WG–12118–00	3 – 5
5YP–12411–00	6 – 1
5LW–14103–00	9 – 27
50C–14105–00	9 – 29
31S–14112–00	9 – 4
509–14135–00	9 – 25
50C–14137–00	9 – 39
5P0–14141–13	9 – 37
5P0–14142–15	9 – 30
5HK–14147–00	9 – 11
5LW–14147–00	9 – 36
5FC–14149–00	9 – 35
5LW–14150–00	9 – 12
5LW–14171–10	9 – 38
22F–14173–00	9 – 28
3RW–14174–00	9 – 23
353–14186–00	9 – 13
5MP–14191–00	9 – 21
3G2–14231–23	9 – 10
4JG–14261–00	9 – 31
50C–14261–00	9 – 5
5HK–14275–00	9 – 33
33S–14280–00	9 – 32
5YP–14429–00	9 – 9
5YP–14561–00	9 – 20
50C–14589–00	9 – 6
5YP–1482K–00	1 – 8
55D–1490J–00	9 – 7
5AP–14940–00	9 – 34
5LW–14958–00	9 – 3
5HK–14985–00	9 – 15
5LW–14994–00	9 – 19
50C–14995–00	9 – 24
3C1–16193–00	15 – 2
22F–23411–01	23 – 4
156–23412–00	23 – 1
22F–23412–01	23 – 3
5TL–2341E–00	23 – 2
5TL–2341E–10	23 – 5
5LW–24411–00	9 – 2
4X8–24512–00	25 – 13
5NM–2536G–00	28 – 13
50C–25895–00	34 – 13
3SP–25914–51	28 – 10
3JD–25917–00	28 – 12

PART NO.	REF. NO.
1UY–25937–51	28 – 11
2YK–27222–00	34 – 4
5BU–27234–00	34 – 15
1VP–83350–00	44 – 18
1YT–83517–00	39 – 8
2GV–83517–00	39 – 7
42X–83517–00	39 – 11
4NK–8357E–00	39 – 9
5YP–85790–00	44 – 10
21S–E1102–00	1 – 1
1S8–E111F–00	4 – 9
5YP–E1133–10	1 – 2
50C–E1166–00	8 – 25
1S8–E1181–01	1 – 19
1S7–E1185–01	5 – 4
1S8–E1191–00	1 – 6
5YP–E1193–00	1 – 14
1S7–E1196–00	5 – 5
50C–E1311–00	1 – 23
55C–E1351–00	1 – 24
55C–E1400–00	2 – 1
50C–E1412–00	2 – 2
50C–E1422–00	2 – 6
3C1–E1549–00	2 – 7
50C–E1571–00	2 – 15
50C–E1603–00	2 – 14
50C–E1631–01	2 – 11
3C1–E1651–11	2 – 5
50C–E1951–00	5 – 8
1S7–E1952–01	5 – 9
5YP–E2111–00	3 – 1
5YP–E2113–00	3 – 4
5YP–E2119–00	3 – 3
5YP–E2121–00	3 – 2
5YP–E2126–00	3 – 7
5YP–E2151–00	3 – 8
1S8–E2156–00	3 – 14
5YP–E2157–00	4 – 8
5YP–E2159–00	3 – 9
	3 – 12
5YP–E2161–00	3 – 11
21S–E2170–01	4 – 1
5MX–E2210–00	4 – 17
1S8–E2213–01	4 – 19
5MX–E2222–00	4 – 18
1S8–E2231–00	4 – 12
5YP–E2241–00	4 – 13
3C1–E2256–00	4 – 16

PART NO.	REF. NO.
1B9–E2280–02	4 – 6
5YP–E2288–00	4 – 7
5YP–E2405–00	6 – 6
1S8–E2413–00	6 – 2
1S7–E2422–00	5 – 1
50C–E2428–00	5 – 3
1S8–E2443–01	6 – 13
1S7–E2450–00	5 – 7
5YP–E2461–00	6 – 5
1S8–E2481–00	6 – 15
1S8–E2482–00	6 – 17
5YP–E2491–00	6 – 3
5YP–E2576–00	6 – 19
5P0–E2590–00	6 – 9
5YP–E2671–00	6 – 8
5YP–E2675–00	6 – 7
3C1–E3300–00	7 – 1
3C1–E3324–00	2 – 16
3C1–E3327–00	7 – 11
1S8–E3411–00	7 – 4
5YP–E3440–00	7 – 7
55C–E3447–00	7 – 8
5MX–E3474–01	8 – 10
50C–E3536–00	8 – 2
1S7–E3542–00	8 – 4
5MX–E3575–01	8 – 22
50C–E3586–00	8 – 3
55C–E4197–00	8 – 8
1S8–E4293–00	21 – 36
50C–E4411–00	8 – 11
1S7–E4412–00	8 – 12
1S7–E4425–00	8 – 21
1S7–E4437–00	8 – 18
5TL–E443E–00	8 – 16
1S7–E4450–00	8 – 13
1S7–E4452–00	8 – 15
50C–E4453–00	8 – 14
1S8–E4613–00	10 – 12
55C–E4703–00	10 – 1
55C–E4718–00	10 – 2
55C–E4728–00	10 – 3
29B–E4747–00	10 – 19
55C–E4787–00	10 – 4
5YP–E4840–00	1 – 9
1S7–E4877–01	8 – 32
5YP–E4881–00	8 – 35
55C–E4882–00	8 – 28
5YP–E4890–00	1 – 10

PART NO.	REF. NO.
55D–E4901–10	9 – 1
5YP–E5113–00	12 – 10
50C–E5150–00	11 – 1
1S8–E5351–00	7 – 3
50C–E5362–00	12 – 22
50C–E5377–00	12 – 16
55C–E5411–00	12 – 1
55C–E5418–00	12 – 11
55C–E5421–00	12 – 17
50C–E5441–00	4 – 20
50C–E5451–00	12 – 2
50C–E5461–00	12 – 18
3C1–E5514–00	14 – 1
3C1–E5521–00	14 – 2
3C1–E5524–00	14 – 5
5YP–E5580–00	14 – 8
5HV–E5583–00	14 – 9
3C1–E5598–00	4 – 15
5YP–E5614–00	14 – 10
55C–E5620–00	13 – 17
3C1–E5641–00	13 – 2
3C1–E5651–00	13 – 12
3C1–E5661–00	13 – 1
3C1–E5666–00	13 – 6
3C1–E5671–10	13 – 4
3C1–E5674–00	13 – 15
3C1–E5767–00	13 – 7
3C1–E6111–00	15 – 1
2S6–E6135–00	15 – 17
3C1–E6144–00	15 – 15
50C–E6150–00	15 – 5
50C–E6154–00	15 – 6
50C–E6321–00	15 – 8
2S6–E6324–00	15 – 9
1S7–E6333–00	15 – 11
3C1–E6344–00	15 – 16
3C1–E6345–00	15 – 20
50C–E6351–00	15 – 10
3C1–E6356–10	15 – 14
3C1–E6357–10	15 – 21
3C1–E6358–00	15 – 13
2S6–E6371–02	15 – 7
50C–E6380–00	15 – 19
1S7–E6777–00	15 – 12
3C1–E7121–00	16 – 6
50C–E7131–00	16 – 5
50C–E7151–00	16 – 2
3C1–E7211–00	16 – 12

PART NO.	REF. NO.
3C1–E7221–00	16 – 20
3C1–E7231–00	16 – 18
50C–E7241–00	16 – 17
50C–E7251–00	16 – 14
3C1–E7285–00	16 – 19
3C1–E7402–00	16 – 11
3C1–E7411–10	16 – 1
3C1–E7456–00	16 – 27
3C1–E7471–00	16 – 9
50C–E8101–00	18 – 4
55C–E8110–00	18 – 9
55C–E8112–00	18 – 14
5H3–E8113–00	18 – 13
55C–E8115–00	18 – 10
3C1–E8119–00	18 – 2
3C1–E8140–00	18 – 1
3C1–E8337–00	18 – 3
3C1–E8511–00	17 – 4
3C1–E8512–00	17 – 5
3C1–E8513–00	17 – 6
3C1–E8531–00	17 – 7
50C–E8540–00	17 – 1
5TP–E8542–00	17 – 2
55C–F1110–10	19 – 1
55C–F1161–10	23 – 13
50C–F1173–00	21 – 25
1S8–F117F–00	43 – 13
1S8–F117G–00	19 – 15
55C–F117K–00	26 – 16
1S8–F1315–00	19 – 10
1S8–F1316–00	19 – 11
50C–F133F–00	34 – 19
55C–F137U–00	35 – 16
55C–F137V–00	35 – 26
1S8–F139R–00	19 – 12
1S8–F139X–00	19 – 13
55C–F1511–00–P0	20 – 1
55C–F1511–00–P4	20 – 1
55C–F1511–00–P5	20 – 1
15K–F1518–00	20 – 5
55C–F1578–50	20 – 6
55C–F1578–60	20 – 6
55C–F1578–70	20 – 6
55C–F160E–00	20 – 11
55C–F1611–00	20 – 7
55C–F1650–00	22 – 6
55C–F1711–00–P3	21 – 1
55C–F1711–00–P4	21 – 1

PART NO.	REF. NO.
55C–F1711–00–P5	21 – 1
55C–F1721–00–P3	21 – 3
55C–F1721–00–P4	21 – 3
55C–F1721–00–P5	21 – 3
55C–F172E–00	21 – 15
5YP–F172K–00	21 – 19
55C–F172L–00	21 – 23
5YP–F172M–00	21 – 24
1S8–F172W–00	21 – 26
55C–F1731–00–P0	21 – 6
55C–F173E–00	21 – 37
55C–F173E–20	21 – 37
55C–F1741–00–P0	21 – 10
55C–F174G–50	21 – 38
55C–F174G–60	21 – 38
55C–F174G–70	21 – 38
55C–F174H–50	21 – 39
55C–F174H–60	21 – 39
55C–F174H–70	21 – 39
55C–F174J–50	21 – 40
55C–F174J–60	21 – 40
55C–F174J–70	21 – 40
55C–F174K–50	21 – 41
55C–F174K–60	21 – 41
55C–F174K–70	21 – 41
1S8–F175C–00	35 – 54
55C–F177G–00	21 – 31
55C–F1817–00	21 – 28
5YP–F1871–00	21 – 17
5YP–F1875–00	21 – 22
55C–F2110–00	22 – 1
4UL–F2123–00	22 – 2
50C–F2141–00	22 – 4
55C–F2151–00	22 – 3
55C–F2167–00	30 – 20
55C–F2210–00	22 – 11
55C–F3100–00	24 – 1
55C–F3110–00	24 – 8
4VK–F3111–10	24 – 19
55P–F3126–00	24 – 5
55C–F3136–00	24 – 2
5VW–F313B–00	35 – 6
50C–F3141–00	24 – 15
5LL–F3144–00	24 – 14
4UV–F3145–00	24 – 3
	24 – 6
2JG–F3147–00	24 – 20
5TF–F3152–00	24 – 11

PART NO.	REF. NO.
5P0–F3156–00	24 – 4
	24 – 7
2JG–F3157–00	24 – 10
509–F3158–L0	24 – 12
5P2–F3170–00	24 – 9
31D–F3181–50	24 – 13
55C–F331A–10	23 – 11
50C–F3340–00	24 – 16
4D0–F3346–00	24 – 18
55C–F3389–00	23 – 15
55C–F3391–10	35 – 1
49P–F3411–00	24 – 17
5VV–F3416–00	23 – 6
55C–F3461–00	23 – 8
1S8–F4110–00	25 – 1
21S–F4141–00	25 – 7
55C–F4311–00	25 – 8
55C–F4312–00	25 – 9
1S8–F4339–00	25 – 2
1S8–F4397–00	25 – 4
5YP–F4500–01	25 – 12
5LW–F4610–01	25 – 16
5LW–F4612–01	25 – 17
1S8–F4638–00	25 – 3
55C–F470F–00	26 – 2
55C–F470F–10	26 – 2
5TF–F4723–00	26 – 3
55C–F4726–00	26 – 5
5VV–F4727–00	26 – 9
1S8–F4728–00	26 – 12
55C–F4730–10	26 – 1
55C–F4730–20	26 – 1
4HF–F4741–00	26 – 4
1S8–F4742–00	26 – 6
55C–F4742–00	34 – 16
1S8–F4768–00	26 – 21
55C–F4773–00–P0	26 – 19
55C–F4773–00–P4	26 – 19
55C–F4773–00–P5	26 – 19
5P0–F4780–01	26 – 10
55C–F478E–10	26 – 18
1S8–F5168–00–0X	27 – 1
1S8–F5168–00–1X	27 – 1
1S8–F5168–00–33	27 – 1
3NA–F5181–01	27 – 8
5TN–F5190–01	27 – 11
55C–F5338–10–33	29 – 1
55C–F5338–10–7X	29 – 1

PART NO.	REF. NO.
55C–F5338–10–8X	29 – 1
1S8–F5364–00	29 – 6
55C–F5366–00	29 – 8
55P–F536G–00	30 – 16
55C–F5377–01	29 – 23
50C–F5381–00	29 – 18
50C–F5388–00	29 – 21
50C–F5389–00	29 – 22
5XK–F5412–00	29 – 14
55C–F5438–00	29 – 12
5XK–F580U–00	28 – 3
55P–F580W–00	30 – 3
4S3–F5827–00	30 – 10
4S3–F5828–00	30 – 11
4ML–F582A–50	34 – 5
5XK–F582U–00	28 – 1
4S3–F582W–00	30 – 1
5YP–F583T–10	32 – 4
55P–F583V–00	34 – 1
50C–F5852–00	34 – 9
5HV–F5852–00	32 – 6
2VN–F5854–00	34 – 11
5HV–F5854–10	32 – 13
2VN–F5855–00	34 – 10
5HV–F585B–10	32 – 12
2VN–F5866–00	34 – 6
5YP–F5867–10	32 – 5
55C–F5872–10	32 – 1
50C–F5873–00	34 – 27
55C–F5875–10	23 – 17
55C–F5876–10	23 – 21
50C–F587A–00	23 – 19
55C–F5887–00	22 – 9
55C–F5888–00	34 – 23
50C–F5894–10	34 – 8
3FV–F589A–00	34 – 14
55P–F5914–00	30 – 8
55P–F5916–00	30 – 18
3JD–F5917–00	30 – 13
4S3–F5919–00	30 – 6
55P–F5921–00	30 – 14
3LD–F5924–00	28 – 9
55P–F5933–00	30 – 17
3LD–F5934–01	28 – 8
1UY–F5937–51	30 – 12
3JD–F5961–00	28 – 14
55P–F5961–00	30 – 15
55C–F6143–00–P0	31 – 8

PART NO.	REF. NO.
55C–F6143–00–P4	31 – 8
55C–F6145–00	31 – 12
55C–F6210–00	31 – 1
1S8–F622F–00	31 – 27
55C–F622H–00	31 – 26
55C–F6240–00	31 – 17
1S8–F6241–00	31 – 19
1S8–F6242–00	31 – 18
55C–F6246–00	31 – 24
5YP–F6257–00	31 – 25
55C–F6259–00	34 – 17
55C–F6280–00	31 – 20
5P2–F6281–00	31 – 30
5P2–F6282–00	31 – 31
55C–F6290–00	31 – 21
55C–F6301–10	31 – 22
55C–F6326–00	31 – 4
55C–F6331–10	31 – 29
5LW–F6332–00	32 – 14
55C–F6335–10	31 – 33
55C–F7111–00	33 – 1
5YP–F7112–00	33 – 3
1S8–F7114–00	33 – 2
55C–F7211–00	33 – 9
1S8–F7311–00	33 – 11
5TF–F7314–00	33 – 35
	33 – 43
55C–F7411–00	33 – 15
5AB–F7413–00	33 – 18
	33 – 23
5TF–F7424–00	33 – 45
5AB–F7425–00	33 – 21
	33 – 26
55C–F7430–00–P1	33 – 29
55C–F7430–00–P2	33 – 29
5BU–F7433–00	33 – 31
55C–F7440–00–P1	33 – 37
55C–F7440–00–P2	33 – 37
5BU–F7444–00	33 – 39
5BU–F7445–00	33 – 32
	33 – 40
55C–F7451–01	33 – 17
55C–F7452–00–P1	33 – 30
55C–F7452–00–P2	33 – 30
55C–F7461–01	33 – 22
55C–F7462–00–P1	33 – 38
55C–F7462–00–P2	33 – 38
1S8–F8100–00	19 – 16

PART NO.	REF. NO.
55C–F8187–00	35 – 9
1S8–F8217–00	31 – 6
1S8–F8227–00	31 – 7
55C–F8273–00	35 – 37
55C–F8274–00	35 – 39
50C–F8307–00	35 – 27
55C–F8311–00–P0	35 – 14
55C–F8311–00–P4	35 – 14
55C–F8312–00–P0	35 – 24
55C–F8312–00–P4	35 – 24
55C–F8321–00	35 – 47
55C–F8322–00	35 – 48
1S8–F8336–00	35 – 50
55C–F8345–10–P0	35 – 2
55C–F8345–10–P1	35 – 2
55C–F835J–00	35 – 15
55C–F835K–00	35 – 25
55C–F836K–00	35 – 35
55C–F8391–50	35 – 52
55C–F8391–60	35 – 52
55C–F8391–70	35 – 52
55C–F8392–50	35 – 53
55C–F8392–60	35 – 53
55C–F8392–70	35 – 53
55C–F8393–50	35 – 55
55C–F8393–60	35 – 55
55C–F8393–70	35 – 55
55C–F8394–50	35 – 56
55C–F8394–60	35 – 56
55C–F8394–70	35 – 56
55C–F8426–00	44 – 2
55C–F842N–00	35 – 44
55C–F844E–00	35 – 3
1S7–H1410–01	36 – 2
50C–H1450–00	36 – 1
50C–H1800–03	37 – 1
5TP–H1801–00	37 – 2
5D9–H1828–00	37 – 5
50C–H183G–00	37 – 3
5D9–H1861–00	37 – 4
5TN–H1940–00	44 – 14
5YP–H1950–00	44 – 15
25D–H1960–00	44 – 12
10C–H2100–01	43 – 4
55C–H2116–00	43 – 7
5VW–H2131–00	21 – 35
55C–H2150–10	43 – 5
31D–H2151–00	43 – 6

PART NO.	REF. NO.
4US–H2310–20	43 – 1
1S7–H2370–00	43 – 3
4S3–H2530–01	43 – 11
50C–H2540–00	44 – 7
55C–H2590–10	43 – 12
55P–H2911–00	42 – 11
55P–H2917–00	42 – 15
55C–H3310–10	38 – 1
5D6–H3311–00	38 – 3
	38 – 7
5LL–H3311–00	41 – 3
55C–H331E–10	38 – 4
55C–H3320–10	38 – 5
55C–H332E–10	38 – 8
55C–H3371–00	44 – 19
55C–H3509–00	39 – 6
55C–H3510–00	39 – 1
50C–H3511–00	39 – 2
50C–H353F–00	39 – 3
55C–H3550–10	39 – 15
55C–H3559–00–P1	31 – 13
55C–H3559–00–P2	31 – 13
55C–H3559–00–P3	31 – 13
50C–H3606–00	39 – 12
55P–H3912–00	42 – 12
5YP–H3922–10	32 – 7
3AY–H3936–10	44 – 17
1S8–H3941–00	42 – 2
1S8–H3947–00	42 – 3
1S8–H3955–01	42 – 6
1S8–H3973–02	42 – 1
55C–H3976–00	42 – 9
1S8–H397X–00	42 – 4
5LW–H3980–00	32 – 10
55C–H411T–00	40 – 10
55C–H411U–00	40 – 11
50C–H4310–01	40 – 1
50C–H4312–00	40 – 5
5HV–H4314–00	40 – 2
50C–H4326–00	40 – 4
50C–H4370–00	40 – 3
50C–H4710–00	41 – 1
4AC–H4714–00	41 – 2
50C–H4721–00	41 – 4
50C–H4723–00	41 – 6
50C–H4735–00	41 – 8
50C–H4743–00	41 – 7
55C–H4759–00	41 – 9

PART NO.	REF. NO.
55C–H4781–00	40 – 6
55C–H4782–00	40 – 8
5VD–H5111–00	20 – 10
31B–H5353–00	38 – 2
	38 – 6
50C–H5540–01	44 – 1
1S8–H5752–00	44 – 21
5BU–H5753–01	44 – 23
5BU–H5757–00	44 – 22
18D–H5885–00	9 – 8
5YP–W0041–00	32 – 16
55P–W0042–00	34 – 2
5XK–W0045–00	28 – 6
55P–W0046–00	30 – 9
3GD–W0047–00	30 – 5
1UY–W0048–50	30 – 7
50C–W0057–00	30 – 4
3LC–WF047–50	28 – 5
1UY–WF048–50	28 – 7
5BU–WF057–00	28 – 4
55C–XH252–00	43 – 9
90105–06061	8 – 7
90105–06848	6 – 4
90105–08850	1 – 16
90105–088D8	19 – 5
90105–088D9	19 – 4
90105–10036	23 – 9
90105–10323	22 – 12
90105–10638	28 – 15
90105–10861	19 – 3
90109–06827	42 – 13
90109–06848	32 – 8
90109–08015	30 – 2
90109–08034	33 – 12
90110–08199	33 – 36
	33 – 44
90111–06802	10 – 11
90111–08853	28 – 2
90116–08017	29 – 13
90119–05071	44 – 24
90119–06044	20 – 8
	21 – 18
	21 – 34
	23 – 16
90119–06051	8 – 24
90119–06190	25 – 6
90123–08046	31 – 34
90149–06011	25 – 14

PART NO.	REF. NO.
90149–06309	43 – 10
90149–06829	4 – 14
90150–06021	35 – 19
	35 – 30
	35 – 45
90153–06803	1 – 3
	1 – 25
90159–03102	39 – 5
90159–06033	26 – 17
90159–06181	21 – 9
	21 – 13
	35 – 36
90163–05803	8 – 19
90170–05302	3 – 10
	3 – 13
90170–08258	29 – 15
90170–08401	31 – 35
90179–08818	19 – 8
90179–10811	19 – 9
90179–12802	13 – 18
	15 – 4
90179–14001	15 – 18
90179–25802	23 – 7
90183–05042	20 – 9
	21 – 2
	21 – 4
	21 – 7
	21 – 11
	21 – 33
	31 – 11
	31 – 14
	35 – 7
	35 – 18
	35 – 29
	35 – 42
90183–06023	8 – 23
90185–10091	27 – 9
90185–10154	23 – 10
90201–06021	18 – 19
90201–06069	6 – 12
90201–06071	26 – 14
90201–06072	20 – 3
90201–06557	35 – 23
	35 – 34
90201–06822	12 – 15
	35 – 5
90201–06830	44 – 4
90201–068N7	26 – 7

PART NO.	REF. NO.
90201–08083	34 – 25
90201–08609	1 – 17
90201–08612	10 – 18
	31 – 5
90201–08804	19 – 6
90201–10118	32 – 3
	34 – 29
90201–10141	10 – 16
90201–101J1	19 – 7
	27 – 10
90201–105E8	14 – 3
90201–12019	15 – 3
90201–122H1	36 – 6
90201–14811	33 – 7
90201–163H8	33 – 4
90201–173F4	16 – 22
90201–175F6	13 – 13
90201–19800	13 – 11
90201–20685	13 – 8
90201–20814	16 – 21
90201–20815	13 – 3
90201–20821	15 – 27
90201–25290	14 – 7
90202–05187	10 – 7
90202–05188	10 – 8
90202–05193	25 – 15
90206–06090	10 – 6
90206–12074	18 – 18
90208–20003	15 – 26
90209–17285	16 – 3
90209–18208	16 – 15
90240–08084	33 – 27
90240–08124	34 – 24
90240–08145	33 – 33
	33 – 41
90252–23800	33 – 28
	33 – 34
	33 – 42
90280–03017	2 – 10
90340–14816	12 – 6
90340–32819	12 – 8
90387–061Y1	10 – 10
90387–06804	20 – 4
90387–068B0	8 – 33
90387–068K7	12 – 14
90387–07819	22 – 8
90387–085E1	34 – 22
90387–08822	10 – 20

PART NO.	REF. NO.
90387–09801	35 – 21
	35 – 32
90387–10277	27 – 7
90387–10805	33 – 46
90387–123A9	29 – 2
90387–123N2	29 – 20
90387–12847	29 – 9
90387–17804	16 – 13
90401–10812	32 – 2
	34 – 28
90430–06817	1 – 4
	1 – 13
	1 – 26
90430–12801	44 – 11
90445–09823	21 – 27
90450–27803	6 – 16
	6 – 18
90462–08814	8 – 20
90462–08817	12 – 5
90464–23811	31 – 36
90464–50800	44 – 16
90464–50801	35 – 51
90467–07029	8 – 9
90467–08003	21 – 29
90467–08075	25 – 11
90467–08801	8 – 5
	8 – 6
90467–09006	21 – 30
	25 – 10
90467–10038	6 – 20
90467–12085	34 – 12
90467–12800	8 – 17
90467–13064	8 – 27
90467–13858	8 – 26
90467–14117	8 – 31
90467–15012	8 – 29
	8 – 30
90480–01803	6 – 14
90480–01813	35 – 41
90480–01868	19 – 14
	41 – 10
90480–13805	21 – 21
90480–13807	35 – 10
	41 – 11
90480–13808	12 – 13
90480–13867	35 – 11
90480–14872	26 – 13
90480–15363	6 – 10

PART NO.	REF. NO.
90480–18418	35 – 20
	35 – 31
90501–030A0	14 – 11
90501–06022	17 – 3
90501–06800	17 – 8
90501–18576	7 – 5
90506–20041	33 – 10
90506–23804	33 – 14
90506–35812	33 – 6
90508–20023	33 – 19
90508–20631	33 – 24
90508–26803	13 – 5
90508–32837	18 – 5
90520–02806	21 – 5
90520–02807	21 – 32
90520–02813	31 – 2
90520–04804	44 – 3
90520–04805	31 – 9
90520–04806	21 – 14
90520–05806	35 – 12
90520–10810	35 – 13
90520–96802	44 – 6
90560–10292	27 – 2
91317–06012	33 – 20
	33 – 25
91317–06016	13 – 16
	36 – 4
91317–06020	4 – 21
	14 – 12
	42 – 16
91317–06025	36 – 3
91317–06030	31 – 28
91317–06100	1 – 22
91317–10100	19 – 2
91401–16012	34 – 26
91401–20012	18 – 12
	18 – 16
91401–30030	33 – 5
	33 – 8
91811–10005	1 – 7
92017–05025	7 – 2
92017–06010	23 – 14
	23 – 18
92017–06012	35 – 4
92017–08016	34 – 21
92017–08025	34 – 20
92907–06200	18 – 11
	18 – 15

PART NO.	REF. NO.
93101–10841	12 – 24
93102–12862	15 – 24
93102–12891	18 – 8
93102–20892	16 – 25
93103–10801	5 – 2
93106–20816	27 – 3
93106–20817	29 – 7
93106–26815	29 – 10
93109–20800	13 – 19
93210–09805	4 – 3
93210–11802	1 – 15
93210–14899	12 – 7
93210–15620	34 – 7
93210–19809	5 – 15
93210–198F0	12 – 23
93210–21801	44 – 8
93210–29803	37 – 6
93210–32803	12 – 9
93210–32807	8 – 1
93210–34801	7 – 6
93210–41041	29 – 5
93210–54805	7 – 10
93210–84801	5 – 6
93306–000Y3	5 – 10
93306–001X2	4 – 4
93306–003Y7	16 – 23
93306–004XB	29 – 11
93306–004XR	16 – 7
93306–204YS	16 – 24
93306–252YL	16 – 8
93306–300X8	27 – 4
93306–301XC	29 – 3
93306–301YM	29 – 3
93306–301YW	29 – 4
93306–305X7	2 – 9
93306–305YL	2 – 8
93306–906Y0	4 – 2
93310–325X1	14 – 6
93310–528YD	2 – 4
93315–112Y8	15 – 23
93410–20038	13 – 9
	16 – 4
93410–22039	16 – 16
93450–16115	2 – 13
93505–16844	15 – 22
93605–06002	4 – 5
93608–30839	18 – 7
93822–14815	16 – 26

PART NO.	REF. NO.
93900–00817	27 – 6
	29 – 17
94107–17853	27 – 5
94110–17819	29 – 16
94568–84111	29 – 24
94568–A8096	4 – 11
94668–84001	29 – 25
94700–00884	1 – 18
95022–06025	12 – 12
95027–06010	4 – 10
	16 – 28
	43 – 8
95027–06012	5 – 12
95027–06014	1 – 11
95027–06020	1 – 12
95027–06025	5 – 11
	5 – 13
95027–06050	5 – 14
9502L–06012	7 – 12
9502L–06020	7 – 9
9502L–06025	11 – 6
	12 – 20
9502L–06040	12 – 4
9502L–06050	11 – 4
	12 – 21
9502L–06055	11 – 3
9502L–06070	11 – 5
95301–08700	34 – 3
95307–06600	26 – 8
	26 – 15
95307–08700	33 – 13
95607–06100	42 – 14
95607–10200	22 – 13
95607–12200	29 – 19
9560M–06100	32 – 9
95614–12100	22 – 5
95617–08620	1 – 5
95707–06500	23 – 12
95707–08500	10 – 13
95707–10500	10 – 14
95707–12500	36 – 5
95807–06010	40 – 12
95807–06012	23 – 20
	23 – 22
95807–06020	21 – 20
	35 – 22
	35 – 33
	35 – 49

PART NO.	REF. NO.
95807–08012	44 – 20
95807–08035	10 – 17
95827–06010	22 – 10
95827–06012	18 – 20
95827–06014	22 – 7
95827–06016	6 – 11
	20 – 2
95827–06020	26 – 20
95827–08016	33 – 16
95827–10035	30 – 19
95827–10045	10 – 15
97007–06016	43 – 2
97007–06025	25 – 5
97007–08016	31 – 3
97027–06016	8 – 34
97027–06020	18 – 17
97602–04310	39 – 4
97607–04114	9 – 26
97607–05216	42 – 7
97607–06212	44 – 13
9760L–04212	32 – 11
97702–40014	39 – 10
97707–40616	41 – 5
97707–50012	21 – 8
	21 – 12
	21 – 16
	31 – 16
	35 – 38
	35 – 40
	42 – 8
	42 – 10
97707–50014	31 – 10
	31 – 15
	35 – 8
	35 – 17
	35 – 28
	35 – 43
	35 – 46
97707–50016	38 – 9
	39 – 13
	40 – 7
	40 – 9
97707–50025	39 – 14
98507–04008	9 – 14
98507–04014	9 – 22
98507–04018	9 – 17
98507–05008	9 – 16
98507–05010	9 – 18

PART NO.	REF. NO.
98507–05016	31 – 23
	44 – 9
98507–05025	31 – 32
98507–06012	26 – 11
	44 – 5
98507–06025	34 – 18
9850L–06008	42 – 5
98517–06012	16 – 10
9870M–04012	32 – 15
98980–06010	10 – 5
98980–06014	10 – 9
99001–10600	18 – 6
99009–10400	14 – 4
99009–17400	13 – 14
99009–19400	13 – 10
99009–20500	15 – 25
99530–10114	1 – 20
	1 – 21
	11 – 2
	12 – 3
	12 – 19

PART NO.	REF. NO.

PART NO.	REF. NO.

PART NO.	REF. NO.

PART NO.	REF. NO.